Power Conversion®

M90 & M90L Modular Online Three-Phase UPS

15kVA, 20kVA, 30kVA, 40kVA, 45kVA, 60kVA Models

User & Installation Manual

www.xpcc.com | © 2026 Xtreme Power Conversion Corporation. All rights reserved. (Rev 8/17/26)

Table of Contents

Safety.....4

Important Safety Instructions.....4

EMC.....4

Installation Information.....4

Maintenance.....4

Recycling the Used Battery.....5

Installation.....5

Initial Inspection.....5

Installation Environment.....5

Unpacking.....6

Moving the Cabinet.....8

Types of UPS Cabinet.....9

Exterior.....9

Internal Mechanisms.....13

Control Panel.....14

LCD Display.....14

Introduction of Modules.....15

Power Cable.....18

Wiring.....18

Power Module Installation.....20

Operation Mode and UPS Operation.....23

Block Diagram of UPS.....23

Operation Mode.....23

UPS Operation.....27

Control Panel and Display Description.....35

Introduction.....35

Screen Description.....38

Alarm List..... 57

History Record.....59

Interface and Communication.....60

X1-Battery Cabinet Temperature Detection Port.....61

X2-Remote EPO Input Port.....61

Other Communication Interface.....62

Troubleshooting.....62

Service.....65

Replacement Procedures Of Power Module.....65

Specifications.....65

Conformity and Standards.....65

Environmental Characteristics.....66

Mechanical Characteristics.....66

Electrical Characteristics (Input Rectifier).....66

Electrical Characteristics (Intermediate DC Circuit).....66

Electrical Characteristics (Inverter Output).....67

Electrical Characteristics (Bypass Mains Input).....67

Obtaining Service.....69

Xtreme Power Conversion Limited Warranty.....7

0Appendix A: Battery Cabinet Installation.....71

Assembly.....71

Internal Battery Wiring.....74

External Battery Wiring.....74

Battery Replacement.....74

Safety

Important Safety Instructions

This UPS contains LETHAL VOLTAGES. All repairs and service must be performed by AUTHORIZED SERVICE PERSONNEL ONLY. There are NO USER SERVICEABLE PARTS inside the UPS.

WARNING:

- The UPS designed for commercial and industrial purpose, it is forbidden to apply for any life sustainment and support.
- The UPS system contains its own energy source. The output terminals may carry live voltage even when UPS is disconnected to an AC source.
- To reduce the risk of fire or electrical shock, UPS installation has to be in a controlled room where temperature and humidity are monitored. Ambient temperature must not exceed 40°C. The system is only for indoor use.
- Ensure all power is disconnected before installation or service.
- Service and maintenance should be performed by qualified personnel only.

Before working on this circuit

- Isolate Uninterruptible Power System (UPS).
- Then check for Hazardous Voltage between all terminals including the protective earth.

Risk of Voltage Backfeed

The isolation device must be able to carry the UPS input current.

EMC

WARNING:

This is a product for commercial and industrial application in the second environment - installation restrictions or additional measures may be needed to prevent disturbances.

Installation Information

WARNING:

- Installation must be performed by qualified personnel only.
- The cabinets must be installed on a level floor suitable for computer or electronic equipment.
- The UPS cabinet is heavy. If unloading instructions are not closely followed, cabinet may cause serious injury.
- Do not tilt the cabinets more than 10 degree.
- Before applying electrical power to the UPS, make sure the Ground conductor is properly installed.
- Installation and Wiring must be performed in accordance with the local electrical laws and regulations.
- The disconnection device should be chosen based on the input current and should break all three phases.

Maintenance

- Only qualified service personnel should perform the battery installation.
- The following PRECAUTIONS should be observed:
    1. Remove watches, rings, or other metal objects.
    2. Use tools with insulated handles.

3. Wear rubber gloves and boots.
4. Do not lay tools or metal parts on top of batteries or battery cabinets.
5. Disconnect the charging source prior to connecting or disconnecting terminal.
6. Check if the battery is inadvertently grounded. If it is, remove the source of grounding. Contacting with any part of the ground might result in electrical shock. The likelihood of such shock can be prevented if such grounds are removed during installation and maintenance.

- UPS is designed to supply power even when disconnected from the utility power. After disconnect the utility and DC power, authorized service personnel should attempt internal access to the UPS.
- Do not disconnect the batteries while the UPS is in Battery mode.
- Disconnect the charging source prior to connecting or disconnecting terminals.
- Batteries can result in a risk of electrical shock or burn from high short circuit current.
- When replacing batteries, use the same number of sealed, lead-acid batteries.
- Do not open or mutilate the battery. Release electrolyte is harmful to the skin and eyes, and may be toxic.

Recycling the Used Battery

- Do not dispose of the battery in a fire. Battery may explode. Proper disposal of battery is required. Refer to your local codes for disposal requirements.
- Do not open or mutilate the battery. Released electrolyte is harmful to the skin and eyes. It may be toxic.
- Do not discard the UPS or the UPS batteries in the trash. This product contains sealed, lead-acid batteries and must be disposed properly. For more information, contact your local recycling/reuse or hazardous waste center.
- Do not discard waste electrical or electronic equipment (WEEE) in the trash. For proper disposal, contact your local recycling/reuse or hazardous waste center.

Installation

Initial Inspection

1. Visually examine if there is any damage inside and outside of packages in the process of the transportation. If any damage, report it to the carrier immediately.
2. Verify the product label and confirm the consistency of the equipment.
3. If the equipment needs to be returned, carefully repack the equipment by using the original packing material that came with.

Installation Environment

1. The UPS is designed for indoor use only and should be located in a clean environment with adequate ventilation to keep the environmental parameters within the required specification.
2. Make sure that transportation routes (e.g. corridor, door gate, elevator, etc.) and installation area can accommodate and bear the weight of the UPS, the external battery cabinet and handling equipment.
3. The UPS uses forced convection cooling by internal fans. Cooling air enters the module through ventilation grills located at the front of the cabinet and exhausted through grills located in the rear part of the cabinet. Please do not block the ventilation holes.
4. Ensure that the installation area is spacious for maintenance and ventilation.
5. Keep the temperature of installation area around 30°C and humidity within 90%. The highest operating altitude is 1000 meters above sea level.
6. If necessary, install a system of room extractor fans to avoid formation of room temperature. Air filters are necessary if the UPS is operated in a dusty environment.
7. It is recommended that you parallel the external battery cabinets to the UPS. The following instructions of

clearances are suggested:

- Keep a clearance of 39" from the top of the UPS for maintenance, wiring and ventilation.
- Keep a clearance of 16" from the back of the UPS and the external battery cabinets for ventilation.
- Keep a clearance of 36" from the front of the UPS and the external battery cabinets for maintenance and ventilation.

8. For safety concerns, we suggest that you shall:
   - Equip with CO2 or dry powder fire extinguishers near the installation area.
   - Install the UPS in an area where the walls, floors and ceilings were constructed by fireproof materials.
9. Do not allow unauthorized personnel to enter the installation area. Assign specific personnel to keep the UPS key.

Unpacking

1. Use a forklift to move the product to installed area. Please make sure the bearing capacity of forklift is sufficient.
2. Please follow the order in the figures below to remove carton and foams.

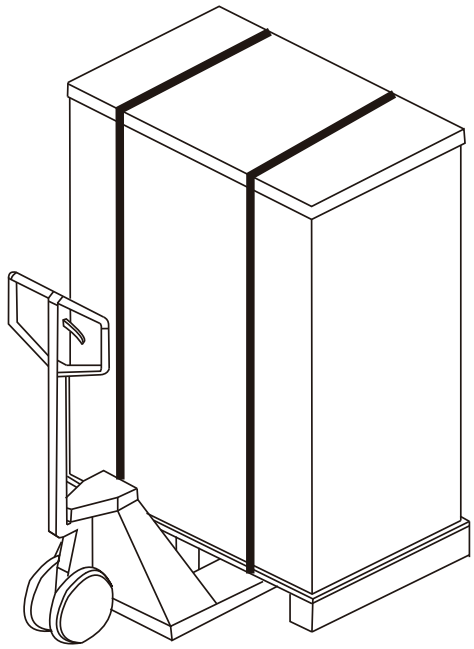

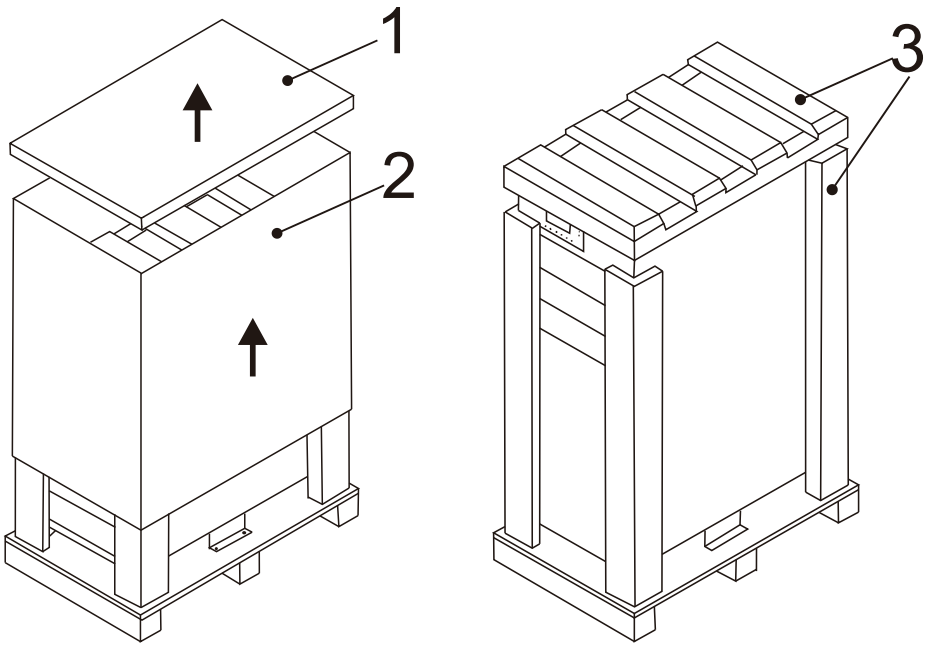

3. Remove 2 fixing cabinet plates and loosen leveling feet by rotating them counterclockwise. Then, move the cabinet from the pallet.

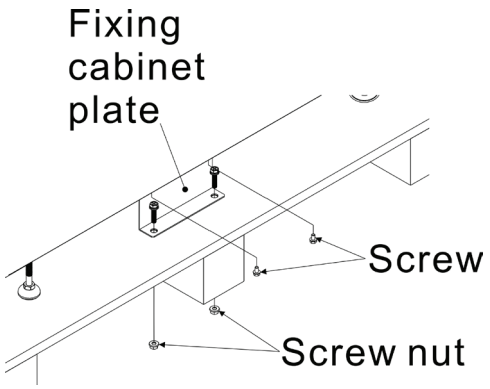

4. To fix the cabinet in position, simply rotate leveling feet clockwise.

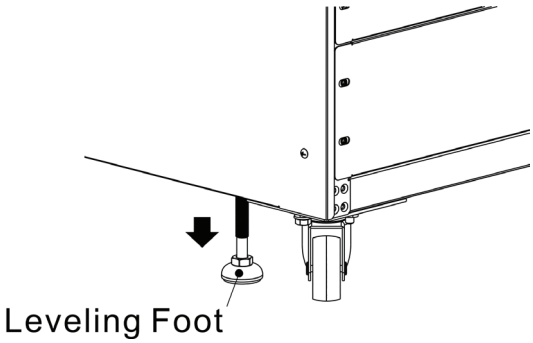

Moving the Cabinet

Warning

The UPS is fixed on the pallet with 2 fixing cabinet plates. When removing it, pay attention to the movement of the casters to avoid accidents. The cabinet can be pushed forward or backward only. Pushing it sideward is not allowed. When pushing the cabinet, pay attention not to overturn it as the gravity center is high.

1. If you need to move the UPS over a long distance, please use appropriate equipment like a forklift. Do not use the UPS casters to move over a long distance.
2. After the UPS has been removed from the pallet to ground, we suggest that at least three people move the UPS to the installation area. One person holds a lateral side of the UPS with hands, another holds the other lateral side of the UPS with hands, and the other person pushes the UPS either from the front side or from the back side to the installation area and avoid tipping the UPS.
3. The casters are designed to move on level ground. Do not move the UPS on an uneven surface. This might cause damage to the casters. Toppling the UPS could also damage the unit.
4. Ensure that the weight of UPS is within the designated bearing capacity of any handling equipment.
5. At the bottom of the UPS, the two casters help you to move the UPS to a designated area. Before you move the UPS, please turn the two leveling feet counterclockwise to raise them off the ground. This protects the leveling feet from damage when moving the UPS.

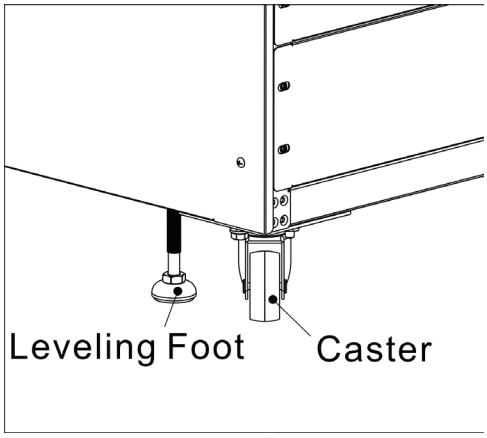

Types of UPS Cabinet

There are two types of UPS cabinets. One is the power cabinet only and the other is the power cabinet stacked on the battery cabinet.

	M90	M90L
Cabinet Type	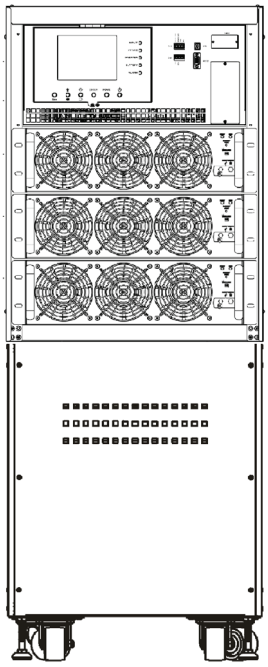	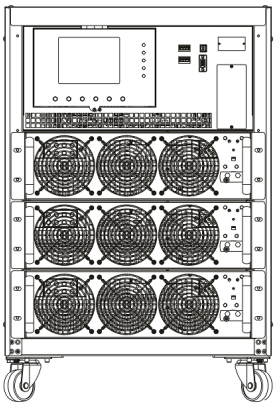
Battery Location	Internal	External
Switch Unit	1	1
Max. Power Module	3(20K)	3(20K)

Exterior

In the front of the UPS, there are control interface (LCD Panel), communication slots, communication ports and 3 Power Module slots.

All wiring terminal blocks are allocated in the back of cabinet. The side panels are locked by screws. The casters at the bottom of the UPS cabinet can be used to move over for short distances. There are two leveling feet to fix and stabilize the UPS cabinet on the ground.

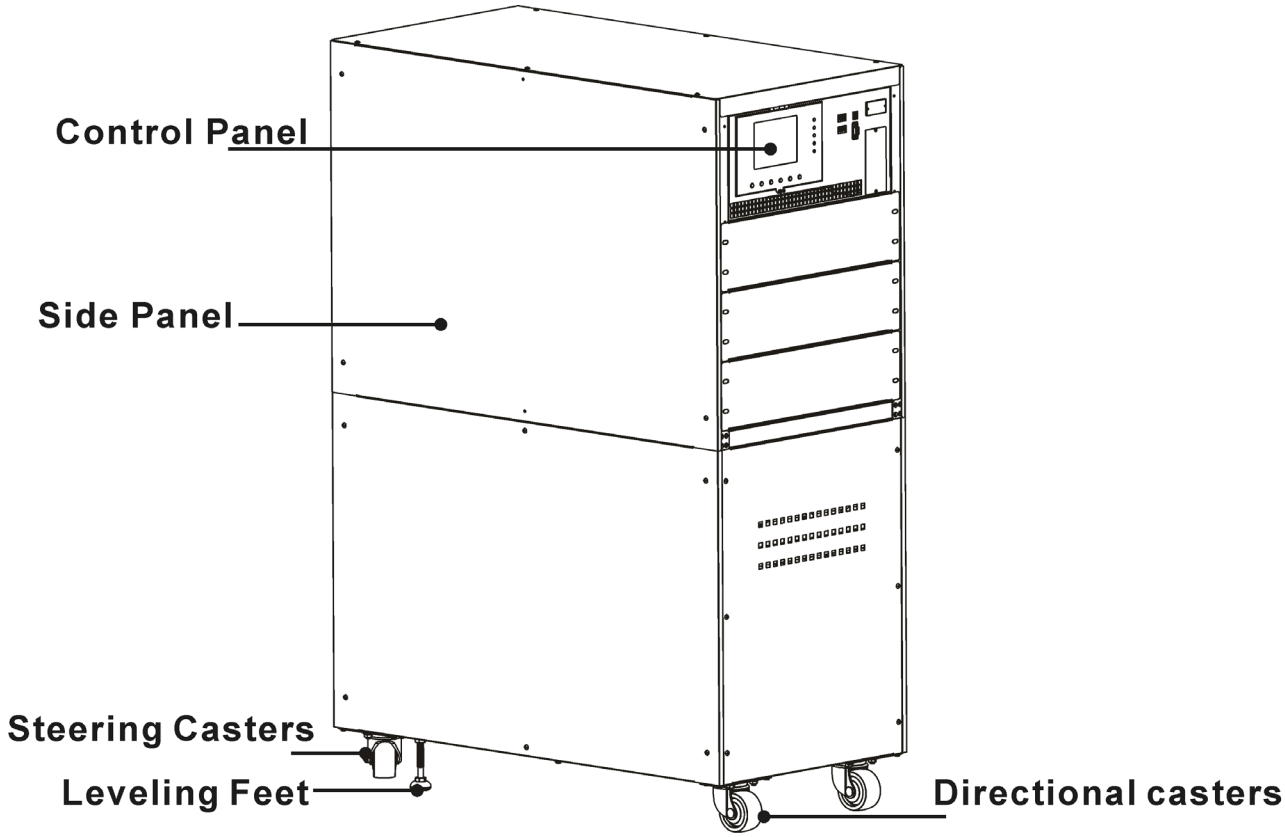

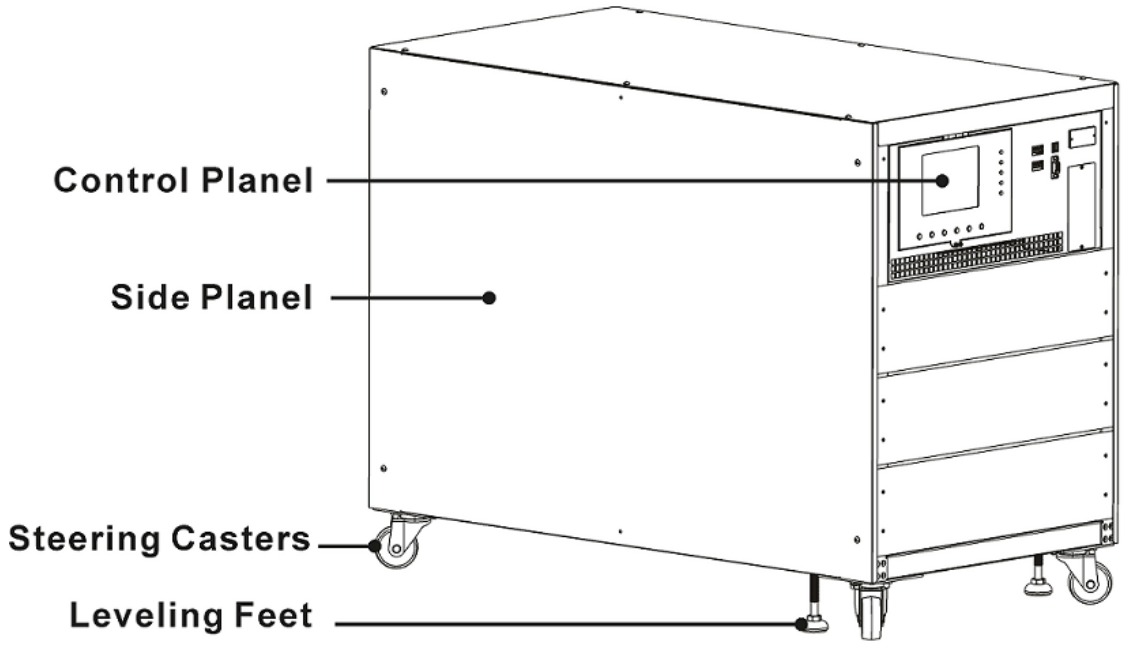

Mechanical Data

Dimensions			
UPS cabinet	**Width**	**Depth**	**Height**
M90	20.2756 "	39.370079 "	55.905512 "
M90L	20.2756 "	39.370079 "	30.03937 "

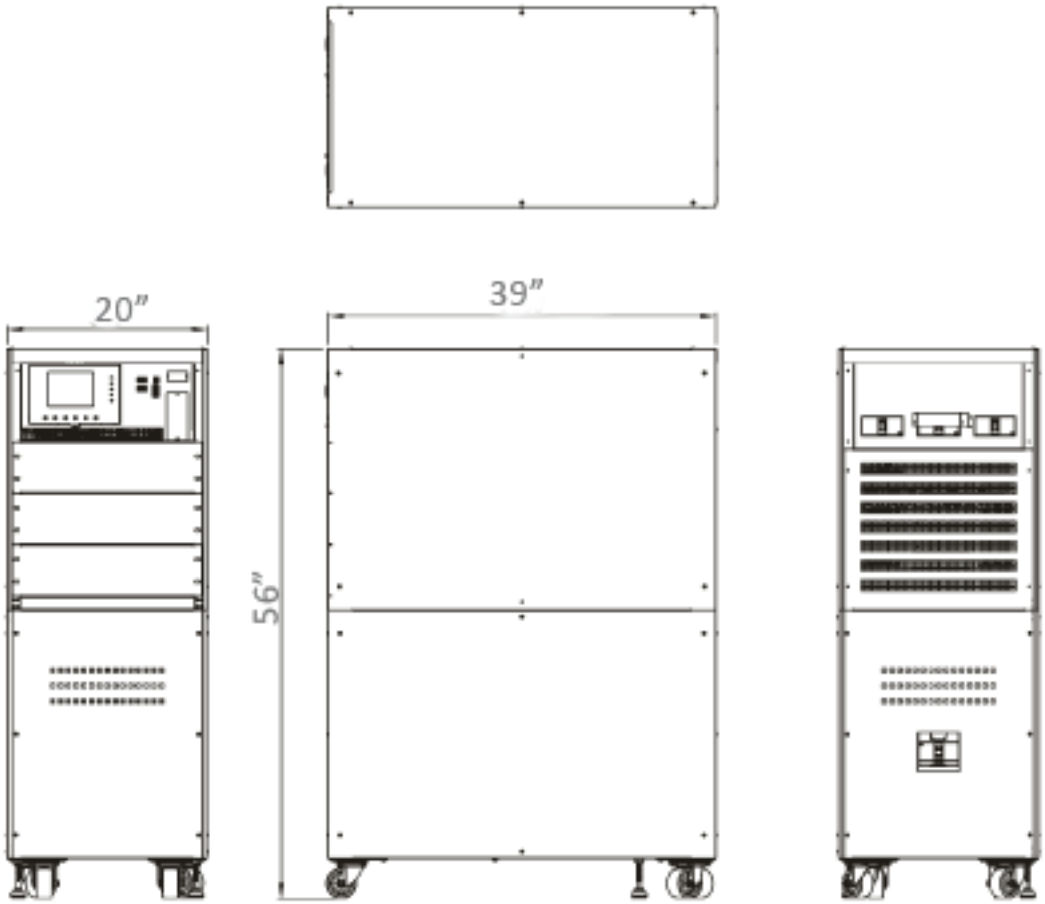
20"
39"
56"

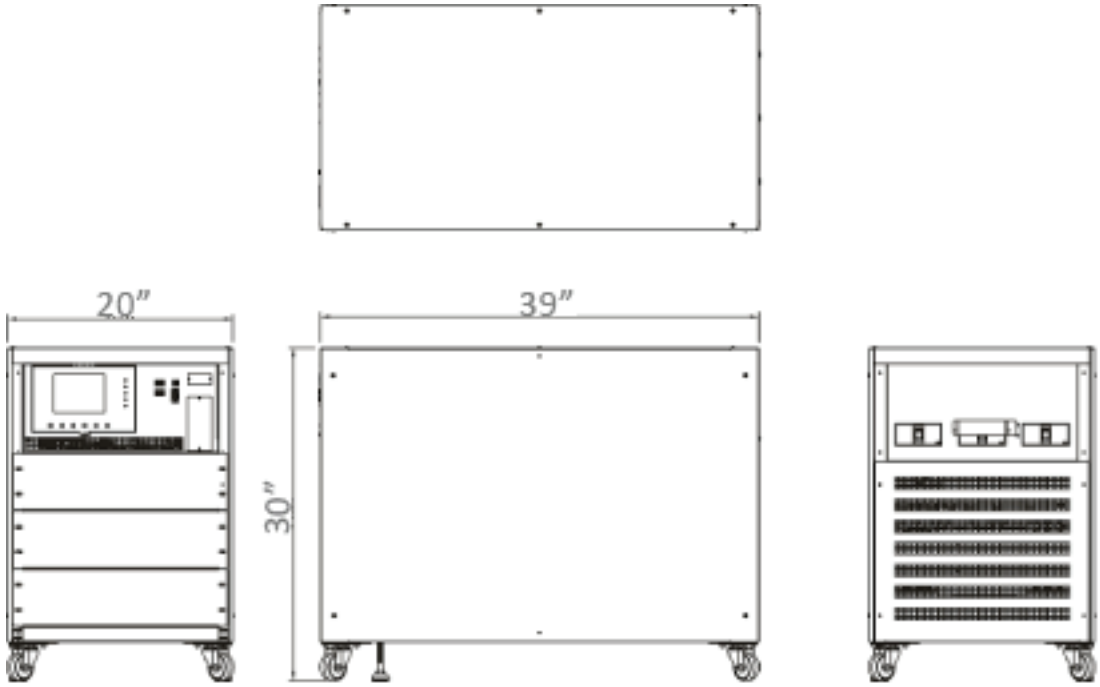
20"
39"
30"

Front / Rear View

Front View: You will see the Power Module and control interface (LCD Panel).

Rear View: You will see the Main, Maintenance Bypass, Output and battery breakers which is installed on the battery cabinet.

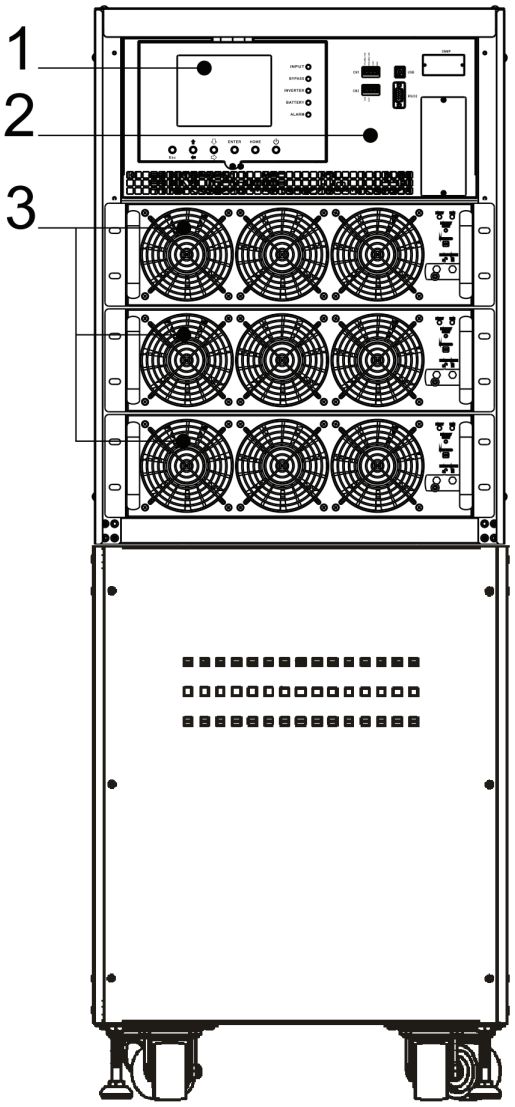

Front View

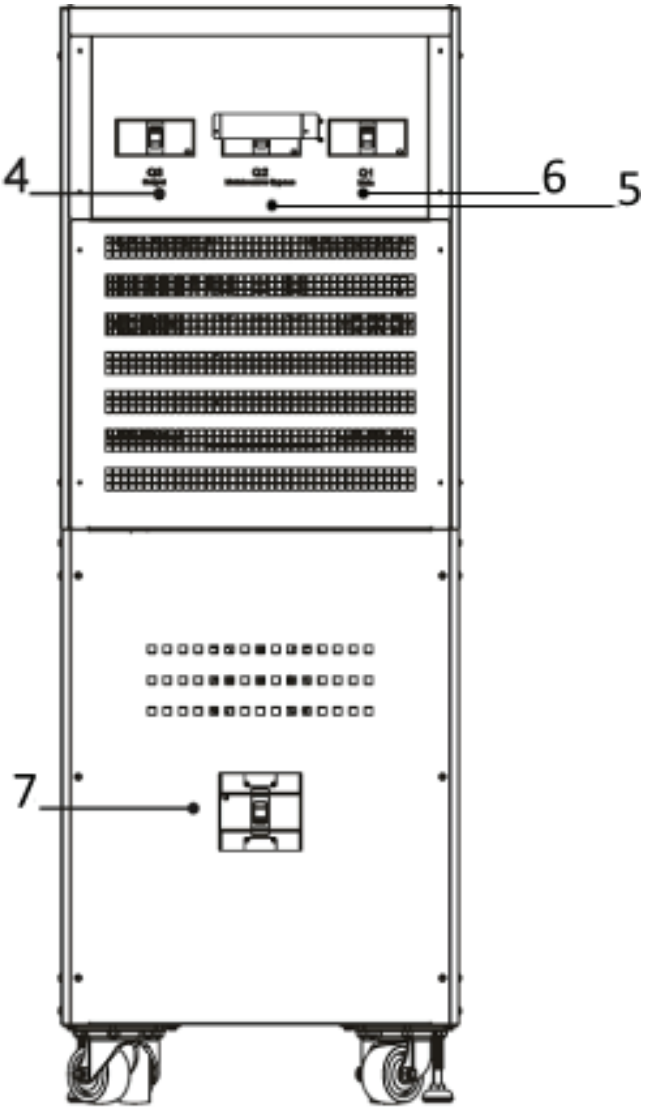

Rear View

1. LCD Panel
2. Control interface
3. Power module
4. Q3 output breaker
5. Q2 maintenance bypass breaker
6. Q1 main (input) breaker
7. Battery breaker (M90 only)

Internal Mechanisms

Breakers

At the rear of the cabinet, you can see Main/Maintenance Bypass/Output breakers. If the cabinet type is with the battery, there is a battery breaker as well.

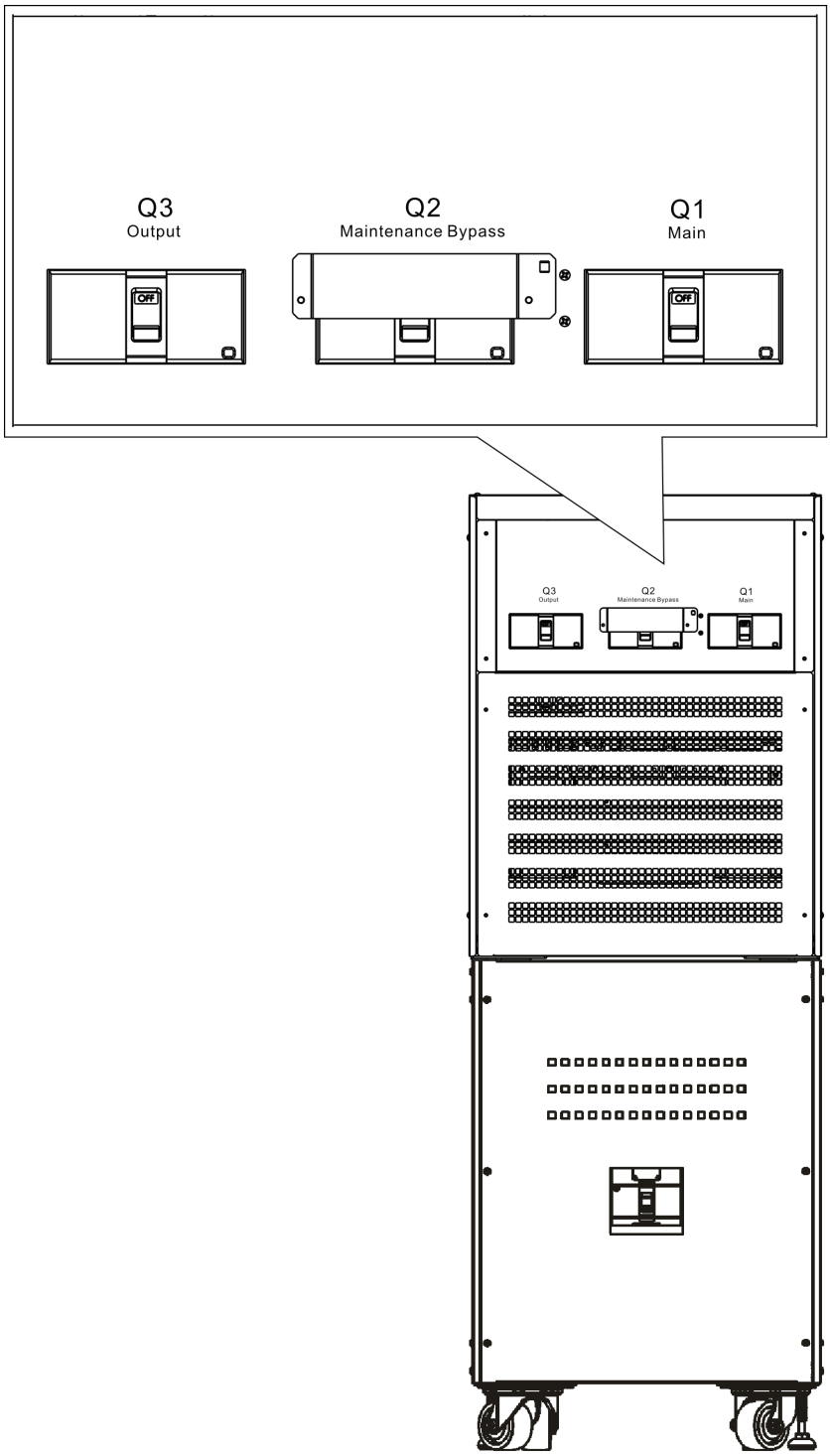

Rear View/Output, Maintenance Bypass, and Input Breakers

Wiring Terminal Blocks

Open the UPS's back doors and you will see the wiring terminal blocks.

No.	Item	Function	Description
1	Output Block	Connects the critical loads	Includes R, S, T and Neutral terminals.
2	Bypass Input Block	Connects bypass AC source	Includes R, S, T and Neutral terminals.
3	Main Input Block	Connects main AC source	Includes R, S, T and Neutral terminals.
4	For UPS Grounding	For UPS grounding	Includes one grounding terminal.
5	Battery Input Block	Connects an external battery cabinet	Includes: Positive (+), Negative (-) and Neutral (N) terminals.

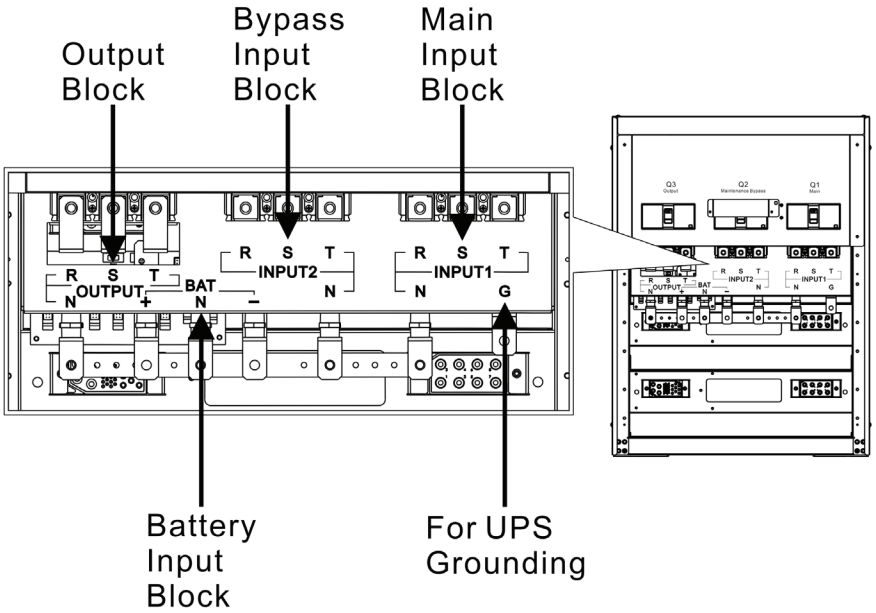

Rear View & Wiring Terminal Block

Control Panel

LCD Display

Through the graphic LCD display, the user can easily understand the operation mode of UPS. In addition, the measurement, parameters, versions of firmware and warnings can be browsed in the friendly interface.

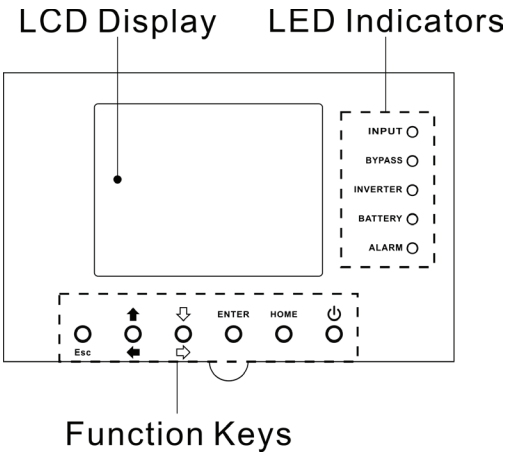

LED Indicators

LED	Color	Status	Definition
INPUT	Green	On	Input source is normal.
		Flashing	Input source is abnormal.
		Off	No input source
BYPASS	Yellow	On	Load on Bypass.
		Flashing	Input source is abnormal.
		Off	Bypass not operating.
INVERTER	Green	On	Load on inverters.
		Off	Inverters not operating.
BATTERY	Red	On	Load on Battery.
		Flashing	Low battery
		Off	Battery converter is normal and battery is charging.
ALARM	Red	On	UPS fault.
		Flashing	UPS alarm.
		Off	Normal.

Function Keys

Control Key	Description
Esc	• When it is the Main screen, you can enter menu by pressing ESC key. • Return to previous screen, when screen is not in Main screen. • Return to previous value in the same row, so you can change it. For example, when changing 4-digit password, press "Esc" to allow cursor back to previous digit.
(Up) (Left)	Key for menu page navigation or digit modification.
(Down) (Right)	Key for menu page navigation or digit modification.
Enter	Confirmation of commands, or cursor displacement.
Home	Return to Main screen.
⏻ Power On/Off	Turn on UPS or turn off UPS.

Introduction of Modules

The design of Power Module make maintenance and replacement quick and easy.

The modular and hot-swappable design of Power Module makes it a highly cost-effective solution to meet your power requirement. The number of Power Modules installed in the UPS can be based on the initial needs. Once the power requirement increases, you can easily install more Power Modules without interrupting the operation of the system.

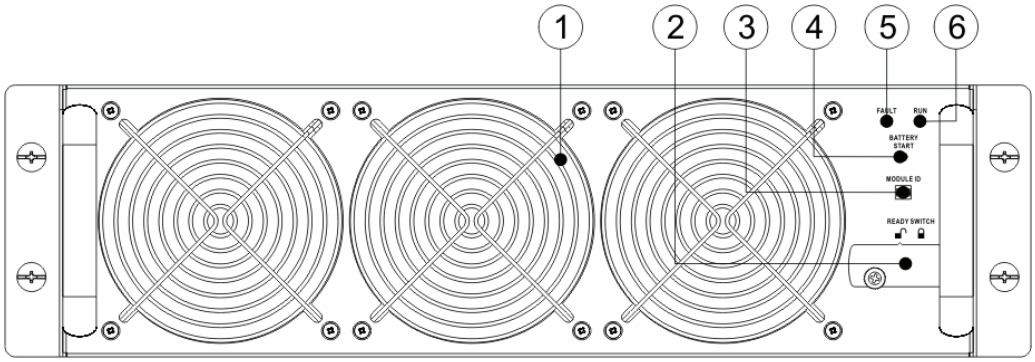

20kVA Power Modue

Power Module

Each Power Module is shipped with its own package. It has to be installed during the UPS system installation. The capacity of each Power Module is 20KVA/18KW. It includes a power factor correction rectifier, a battery charger, an inverter and control circuit.

No.	Item	Description	
1	Fan	The Power Module uses forced convection cooling by these fans. Cooling air enters the module through ventilation grills and exhalation exhausts through grills located at the rear of the module. Please do not block the ventilation area.	
2	Ready Switch	Unlock it before removing the Power Module. Lock it when the Power Module is well installed. Then the Power Module can start to work.	
3	DIP Switches	There are three DIP switches for Power Module address setting. In the same cabinet, each Power Module ID MUST be exclusive.	
4	Battery Start Button	When AC input is not existing, use this button to start battery power for UPS.	
5	FAULT LED	ON	The Power Module is in fault condition or the Ready Switch is unlocked.
		ON/OFF 0.5 sec	The Power Module IDs conflict.
		ON/OFF 0.15 sec	The static switch is not found.
6	RUN LED	ON	The Power Module normally works as a slave module.
		ON/OFF 0.5 sec	The Power Module normally works as a master module.
		ON/OFF 0.15 sec	The CAN Bus communication doesn't work.

DIP switch setting and Module Address

Module Address	DIP SWITCH	Module Address	DIP SWITCH
0	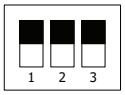	1	
2	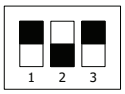	3	
4	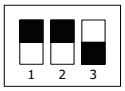	5	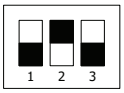
6		7	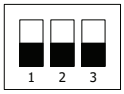

Power Module ID Assignment

According to the Module Address and the position of SW1 and SW2, the Power Module's ID is assigned. These two switches, SW1 & SW2 are mounted in the Parallel board which is located at the back of UPS cabinet.

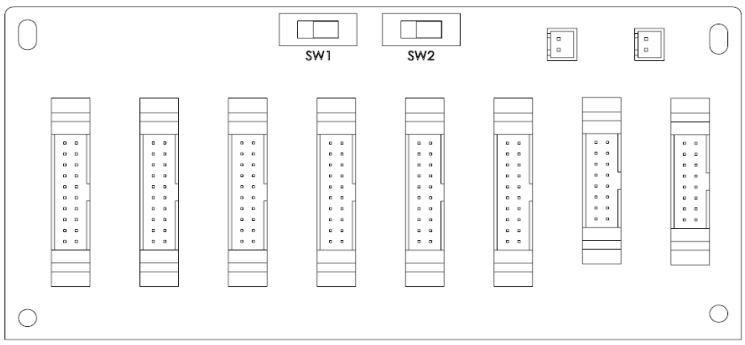

Parallel Board

The SW1 and SW2 positions have been well installed before leaving factory. It's not necessary to change it for single UPS system application.

Module ID Assignment

SW1 & SW2	Module Address	Module ID	SW1 & SW2	Module Address	Module ID
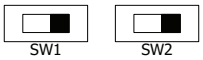	0	0	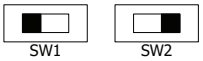	0	9
	1	1		1	10
	2	2		2	11
	3	3		3	12
	4	4		4	13
	5	5		5	14
	6	6		6	15
	7	7		7	16

SW1 SW2	0	18	SW1 SW2	0	27
	1	19		1	28
	2	20		2	29
	3	21		3	30
	4	22		4	31
	5	23		5	32
	6	24		6	33
	7	25		7	34

Power Cable

Warning

Please follow the local wiring regulations. Follow environmental conditions and refer to IEC60950-1.

AC input and output maximum current and power cable configuration.

Model	20KVA	40KVA	60KVA
Current (A)	60.1	120.2	180.3
Power cable (mm2)	16	50	95
Fixation torque force (lb-in)	60	60	60

Note: Installer has to consider the max. current and wiring gauge when considering future extension.

DC input maximum current and power cable configuration.

Model	20KVA	40KVA	60KVA
Current (A)	98	196	294
Power cable (mm2)	25	95	150
Fixation torque force (lb-in)	60	60	60

Wiring

WARNING:

- Before wiring, make sure the AC input and battery power are completely cut off.
- Make sure the breakers, Main Breaker (Q1), Maintenance Breaker (Q2), Output Breaker (Q3) and battery breaker are all in the OFF position.

Installation Drawing

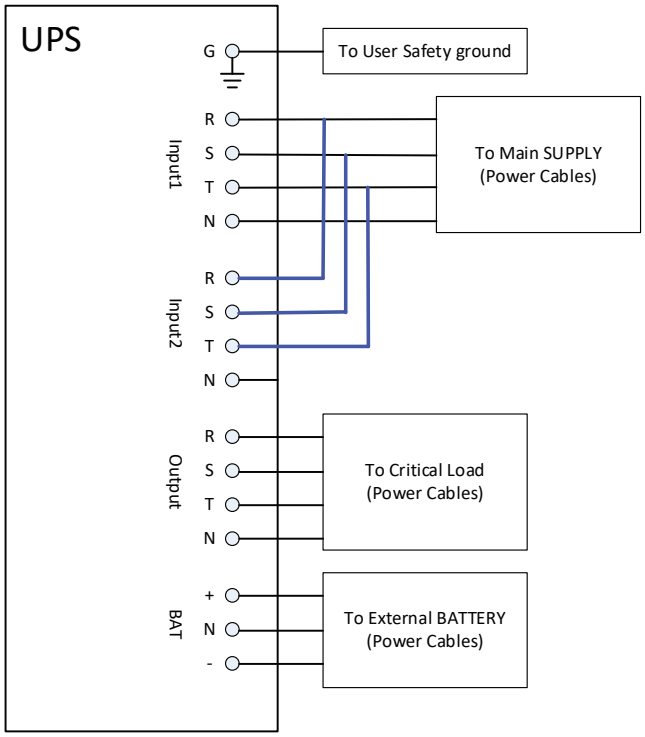

UPS Cabinet Wiring

AC source connection

This UPS is for Single input application, connect Input1 to the AC power source and use 3 short wires to connect Input1 and Input2.

Warning: These three wires are required for Maintenance Bypass power source.

The sequence of three phase, R, S and T must be connected accordingly. The wrong sequence will alarm a warning when the UPS is powered. The N must be connected firmly. A warning message will be indicated, if the N is not connected well.

External Battery Cabinet Connection

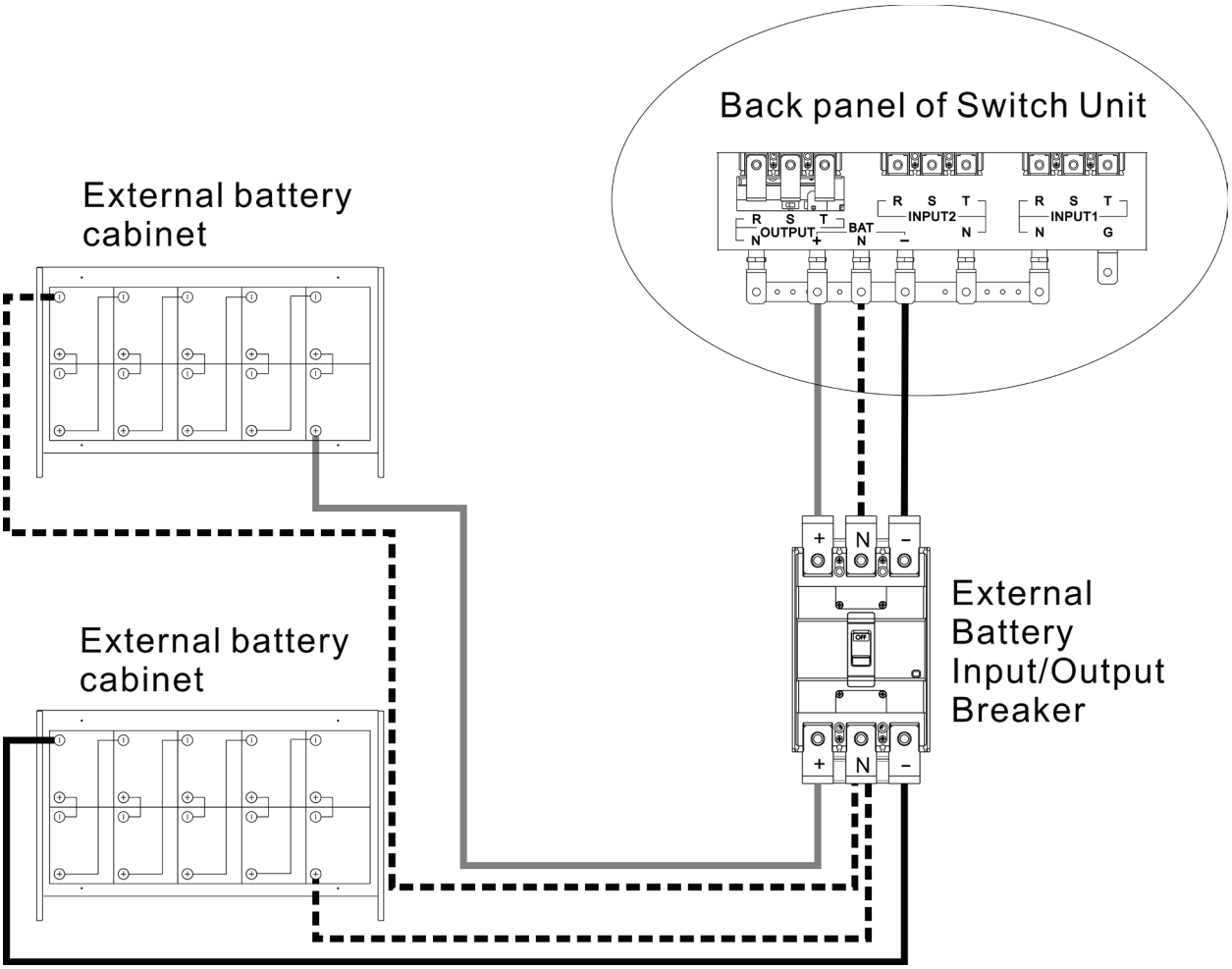

External Battery Cabinet Wiring

After the battery is completely installed, be sure to set up nominal battery voltage, battery capacity and maximum charging current in LCD setting. Otherwise, if battery setting is different from actual installation, the UPS will keep warning.

Power Module Installation

The weight of Power Module is over 30 kg so at least two persons are required for handling.

Insert the Power Module
Warning: The power Modules installed in the same cabinet must at the same rating.

1. Adjust the DIP switch positions to set the different Module Address.

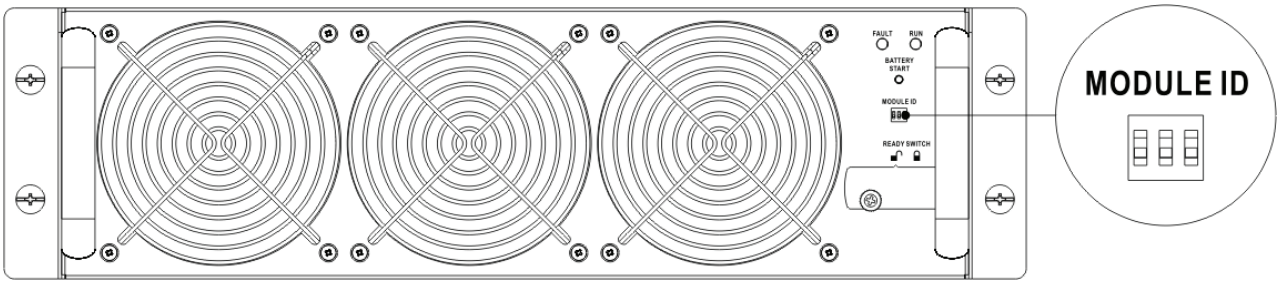

2. Place the ready switch at the front panel of the module to the "🔓" position (i.e., in unready state).
3. Insert the Power Module into an unoccupied slot by two persons.

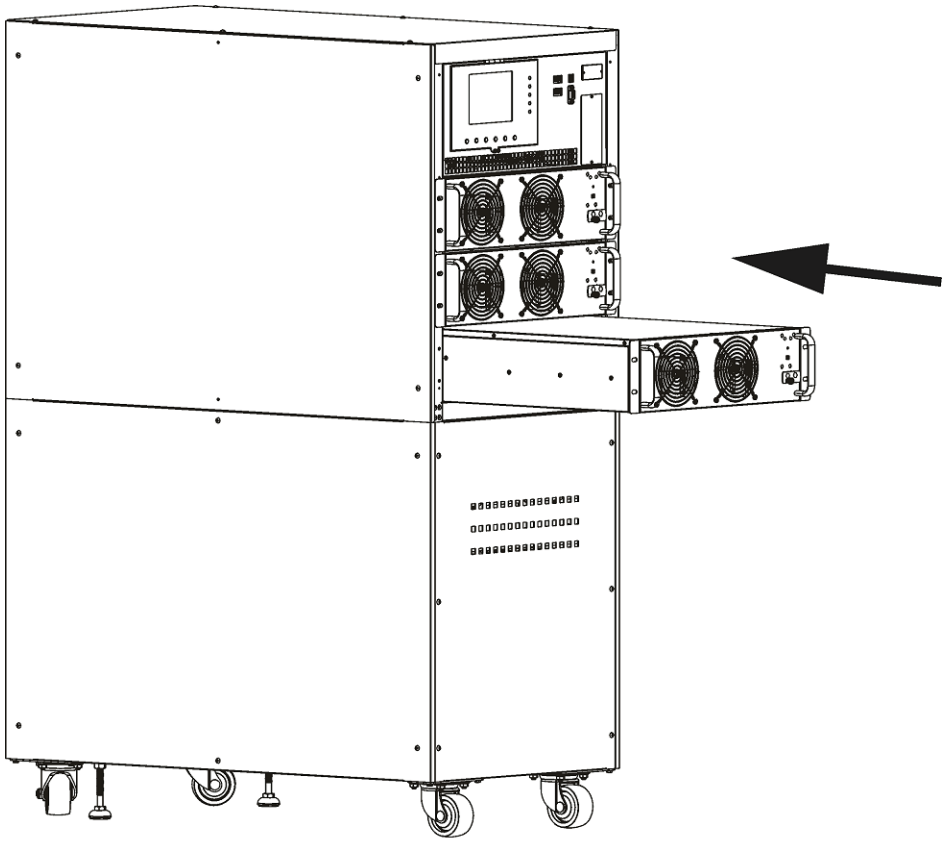

4. Secure the Power Module to the cabinet by fixing the screws at the front panel of the Power Module.

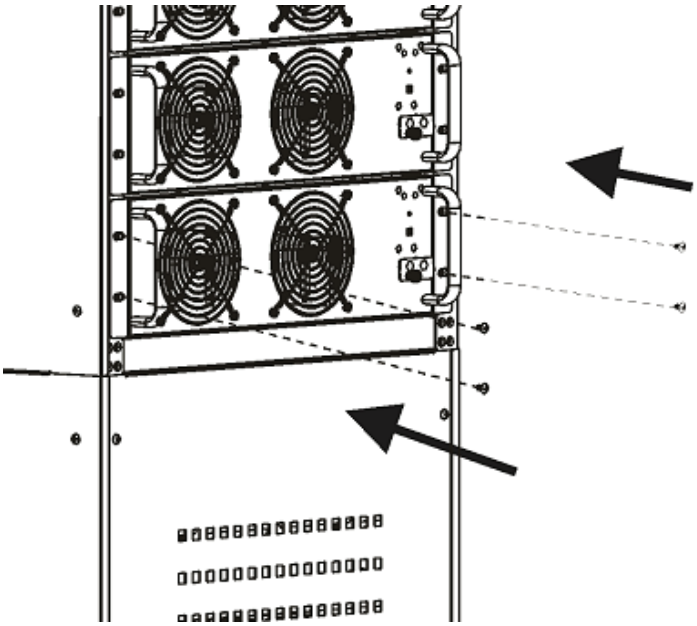

5. Move the ready switch to the "🔒" position (i.e., in ready state).

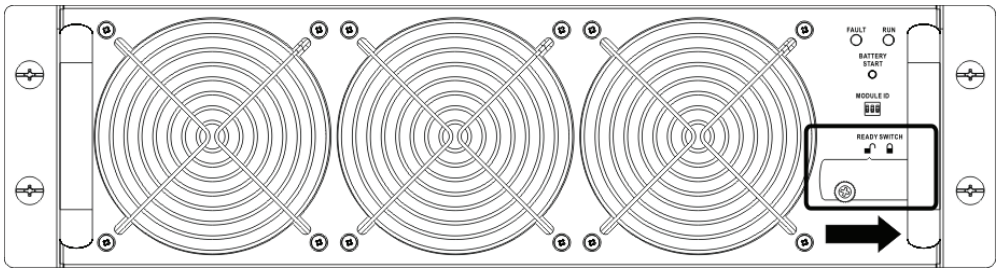

Remove the Power Module

⚠ Warning

- Before removing any Power Module, make sure the remaining Power Modules can support the critical loads.
- At least one Power Module MUST stay in the UPS cabinet in case the UPS system is operating in Maintenance Bypass Mode.

1. Turn the ready switch to the " " position.
2. The Power Module FAULT LED (RED) indicator is lit to show the Power Module output is off and disconnected from UPS system.

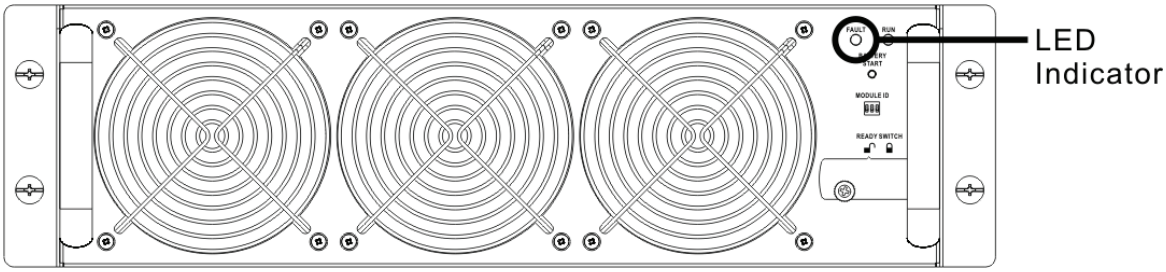

3. Use a screwdriver to remove the four screws from fixing holes.
4. Two people pull out together and remove the Power Module from its slot.

Operation Mode and UPS Operation

Block Diagram of UPS

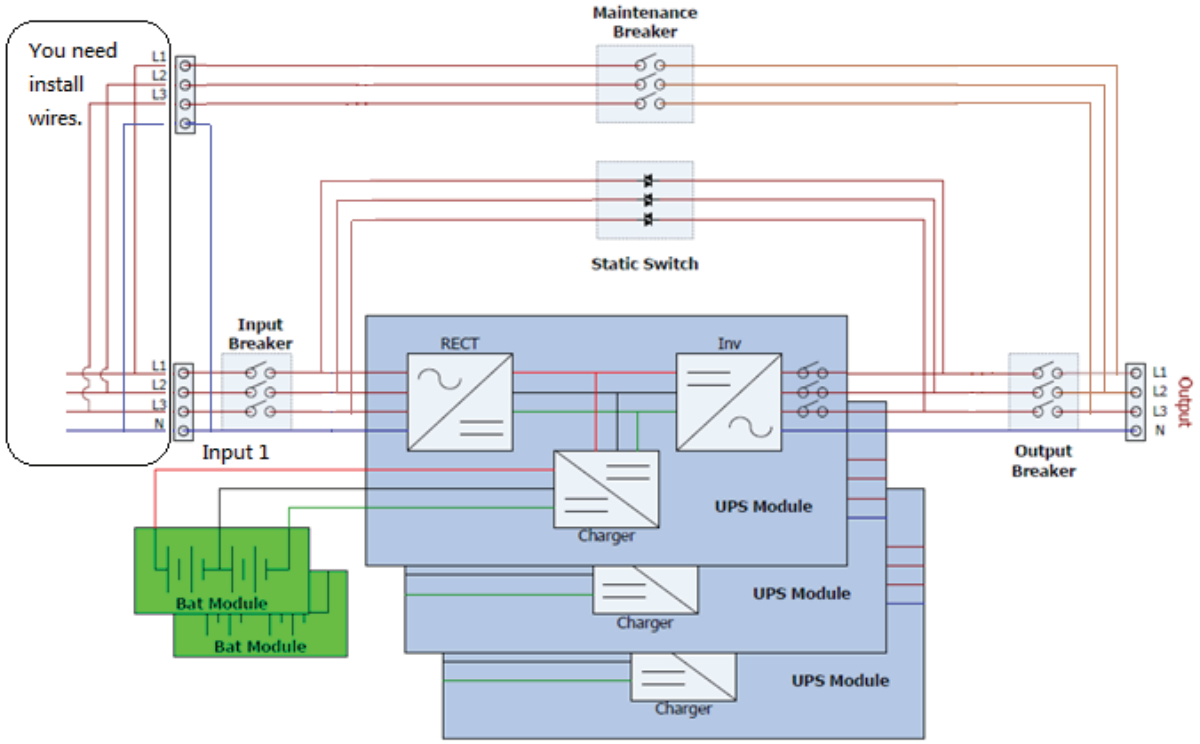

Wiring diagram

Operation Mode

This modular UPS is a three-phase, four wire on-line, double-conversion and reverse-transfer UPS that permits operation in the following modes:

- Standby Mode
- Line Mode
- Battery Mode
- Bypass Mode
- ECO Mode
- Shutdown Mode
- Maintenance Bypass Mode (manual bypass)

Standby Mode

Upon connecting to utility input power, the UPS is in Standby mode before UPS is turned on (if BYPASS enable setting is Disabled), and charger function will be active when the battery is present. The load is not powered under this mode.

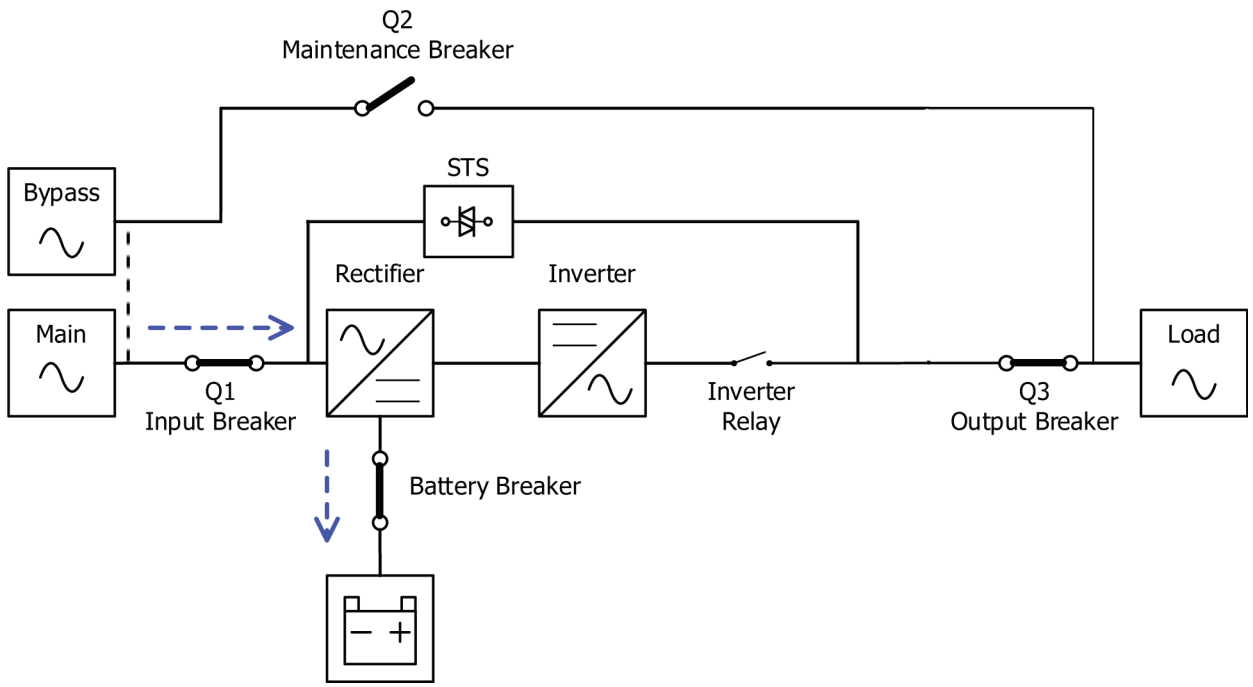

Standby Mode Diagram

Line Mode

In Line Mode, the rectifier derives power from the utility power and supplies DC power to the inverter and the charger charges the battery. The inverter filters the DC power and converts it into pure and stable AC power to the load.

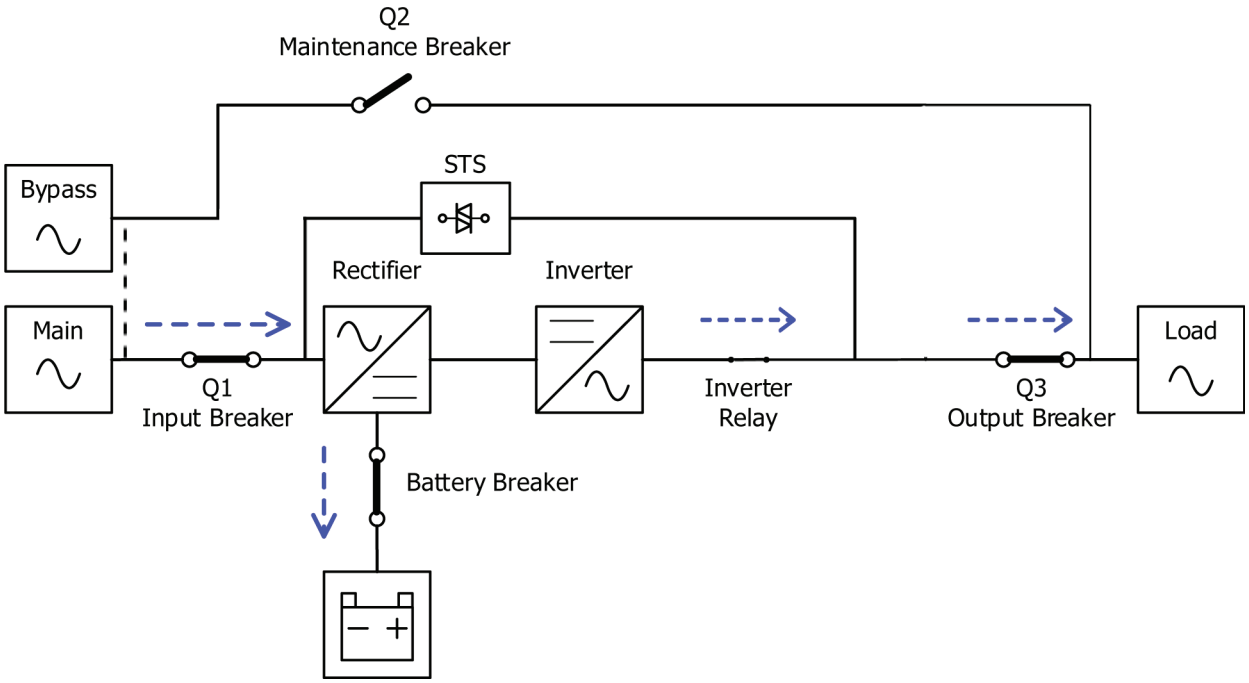

Line Mode Diagram

Battery Mode

The UPS automatically transfers to Battery mode if the utility power fails. There is no interruption in power to the critical load upon failure. In battery mode, the rectifier derives power from the battery and supplies DC power to the inverter. The inverter filters the DC power and converts it into pure and stable AC power to the load.

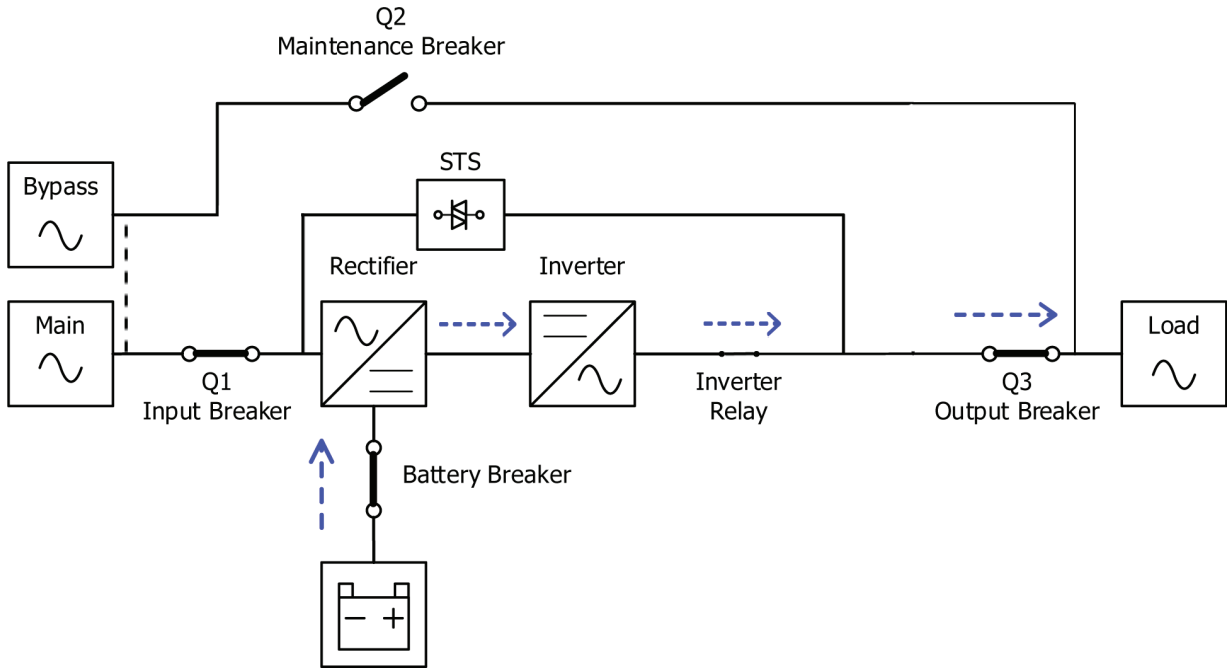

Battery Mode Diagram

Bypass Mode

Upon connecting to utility input power, the UPS is in Bypass mode before UPS is turned on (if BYPASS enable setting is Enabled), and charger function will be active when battery is present. After UPS has been turned on, if the UPS encounters abnormal situations (over-temperature, overload …, etc.), the static transfer switch will perform as a transference of the load from the inverter to the bypass source with no interruption. If the transference is caused by a recoverable reason, the UPS will turn back to line mode when abnormal situation is solved.

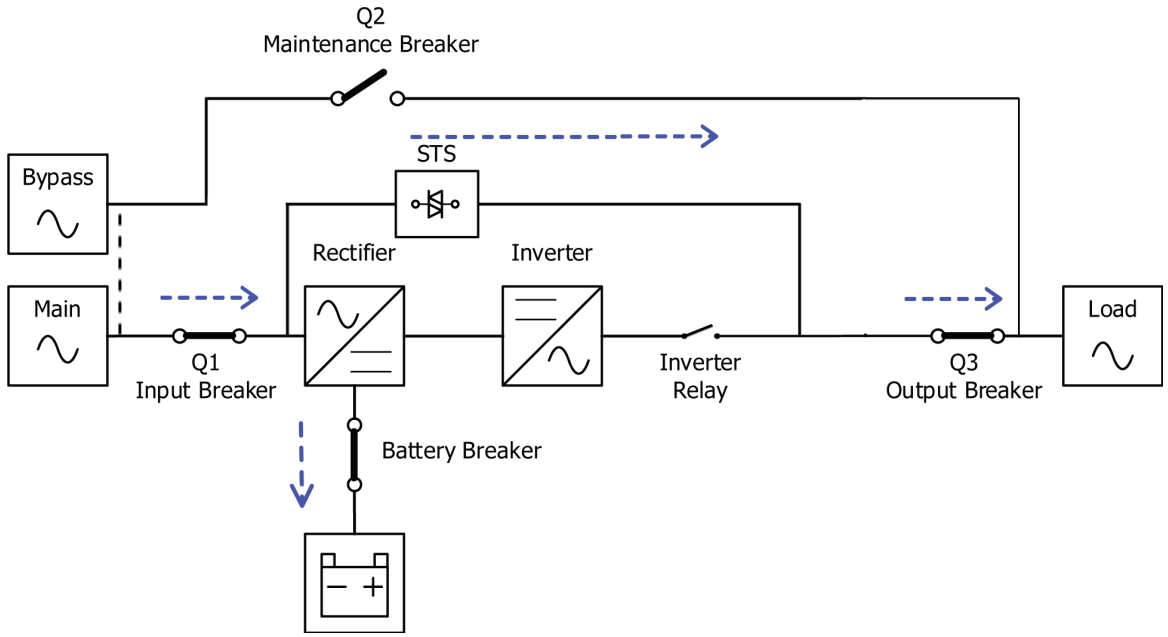

Bypass Mode Diagram

ECO Mode

The ECO Mode is enabled through the LCD setting menu. In ECO mode, the load is powered by bypass when the bypass voltage and frequency are within the acceptable ranges. If the bypass is out of range, the UPS will transfer the power source of load from bypass to inverter. In order to shorten the transfer time, the rectifier and inverter are working when the UPS is in ECO mode.

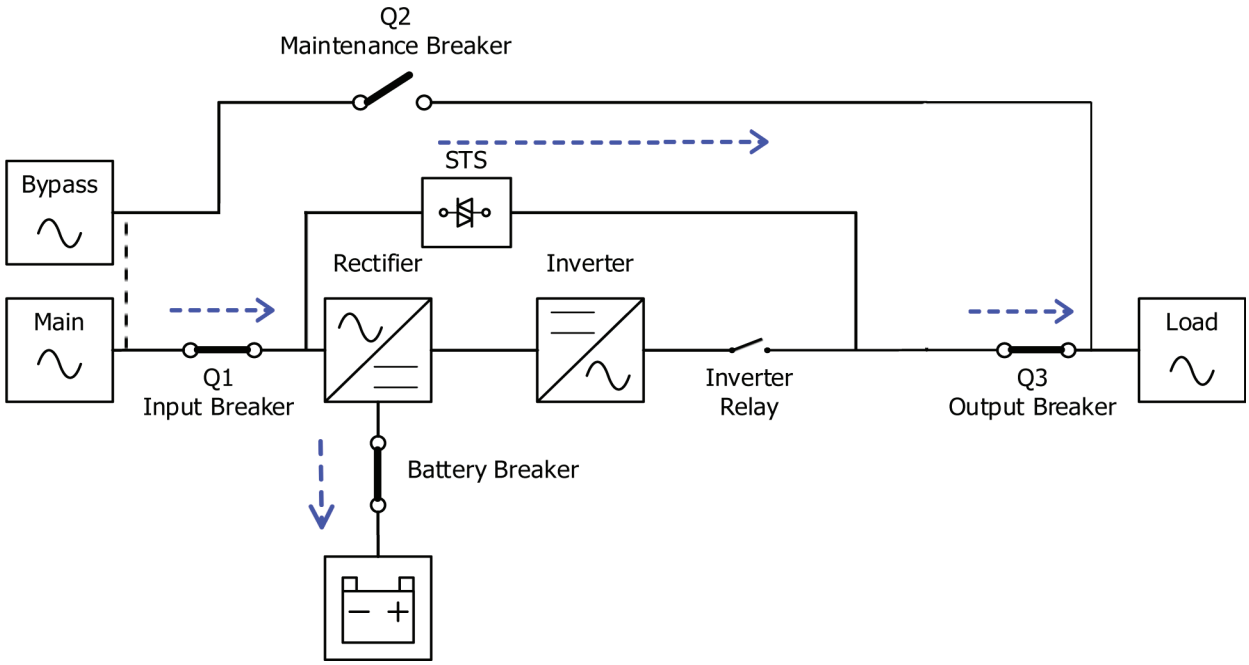

ECO Mode Diagram

Maintenance Bypass Mode

When the UPS is in the off state and the utility power source is absent, the UPS will enter into shutdown mode. Or when the UPS has discharged the battery to the cut-off level, the UPS will enter into shutdown mode as well. When the UPS enters this mode, it is going to shut off the control power of UPS. The rectifier, charger and inverter are all in off state.

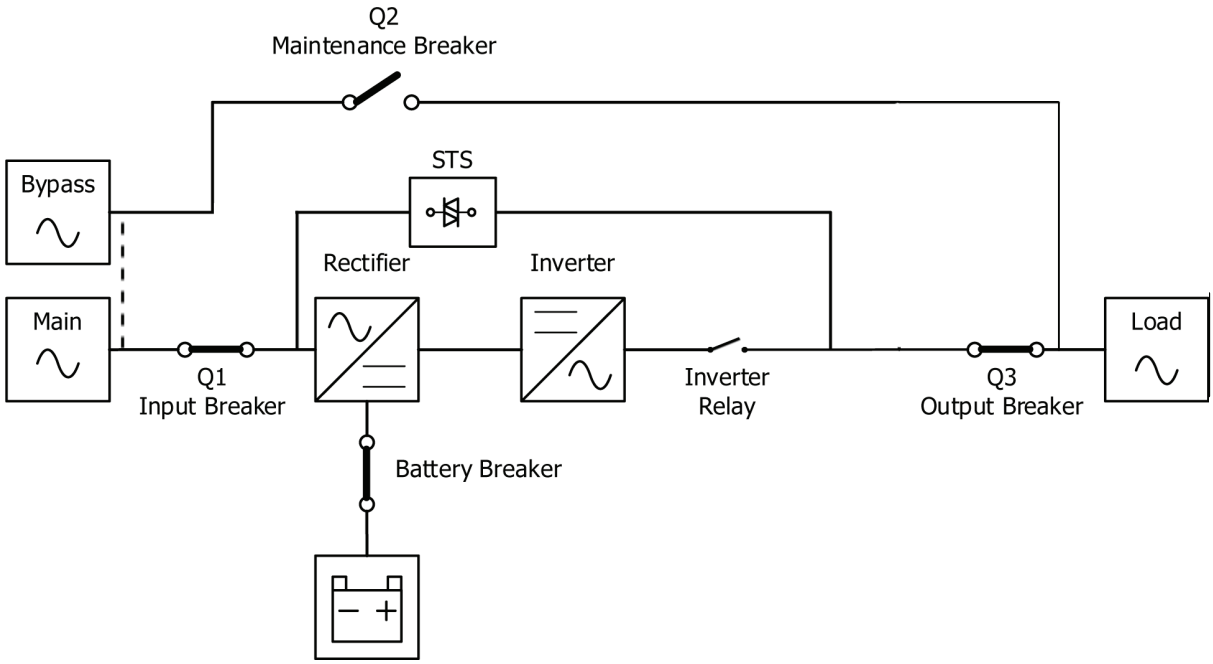

Shutdown Mode Diagram

Maintenance Bypass Mode

A manual bypass switch is available to ensure continuity of supply to the critical load when the UPS becomes unavailable e.g. during a maintenance procedure. Before entering the maintenance bypass mode, make sure the bypass power source is normal.

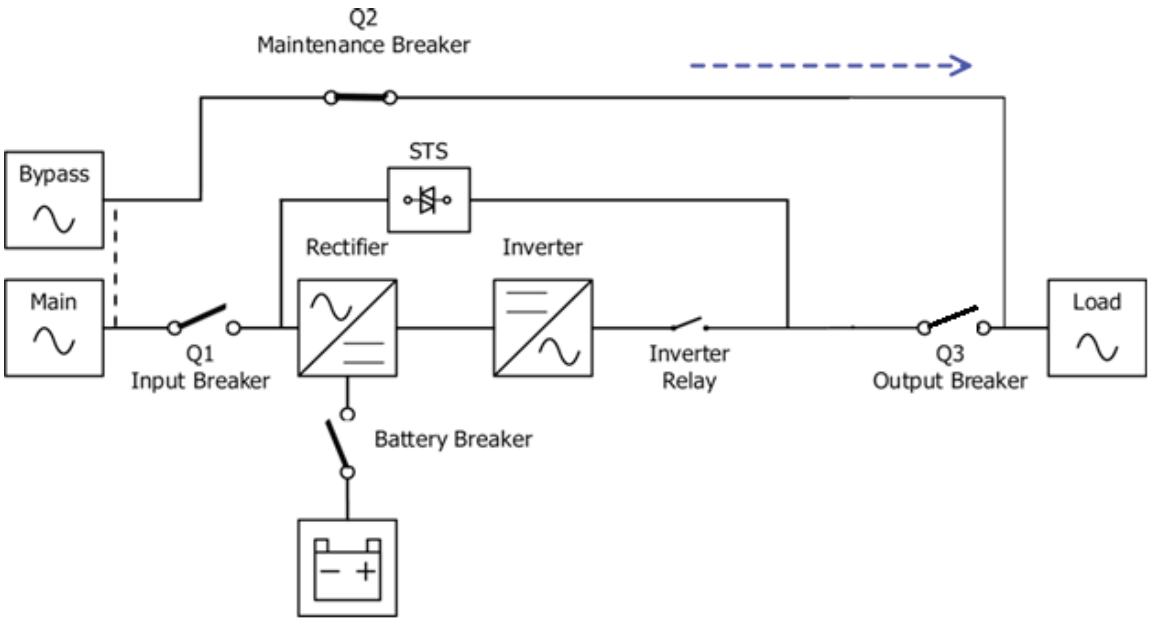

Maintenance Bypass Mode Diagram

UPS Operation

- Do not start the UPS until the installation is completed.
- Make sure the wiring is correct and the power cables are properly connected.
- Make sure the Power Modules' addresses have been configured. Refer to the Power Module ID Assistance section.
- Make sure the ready switch on the Power Module has been moved to the "Locked" position.
- Make sure all the breakers are switch OFF.

AC Startup

Ensure to follow this procedure when turning on the UPS from a fully powered-down condition.

The operating procedures are as follows:

Step 1: Refer to the "Installation Section"to connect the power cables and install the Power Modules and the battery required for the UPS system.

Step 2: Switch ON the battery breaker.

Step 3: Switch ON the external power switch to power the UPS.

Step 4: Switch ON the input breaker (Q1). The UPS will enter into Standby Mode, if the setting of Bypass mode is disabled (default).

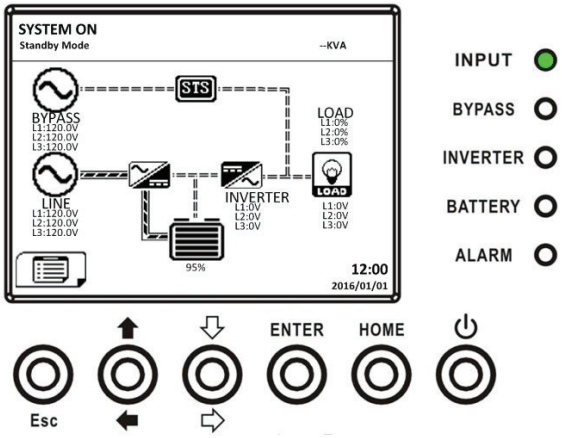

Or the UPS will enter into Bypass Mode, if the setting of Bypass mode is enabled.

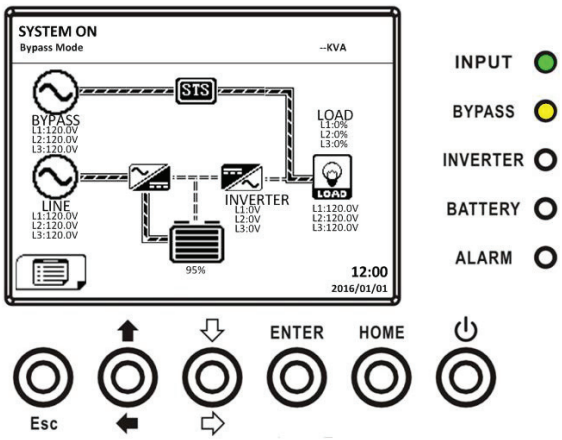

Step 5: Make sure there is no warning or fault event happening. If there is, please refer to Chapter 6 Troubleshooting to solve it.

Step 6: Press Power ON/OFF button for two seconds to enter into Line Mode as shown below.

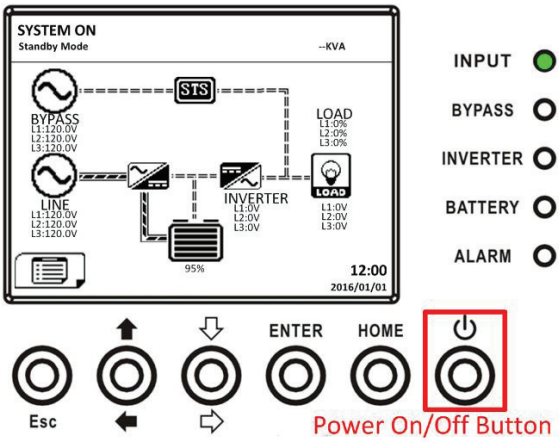

After turned on, UPS will do self-test and start Inveter up. UPS will be transferred to Line mode when all power modules are ready.

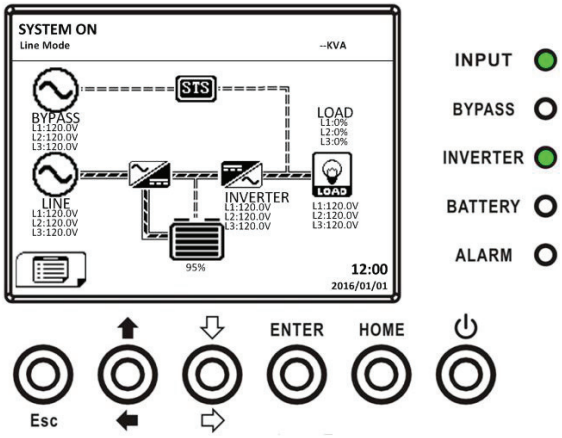

Step 7: Switch ON the output breaker (Q3). AC startup procedure is complete.

Cold Start Startup

Step 1: Switch ON the battery Breaker.

Step 2: Press the "Battery Start" button on any one of Power Modules to start up the control power of all Power modules and STS as shown below.

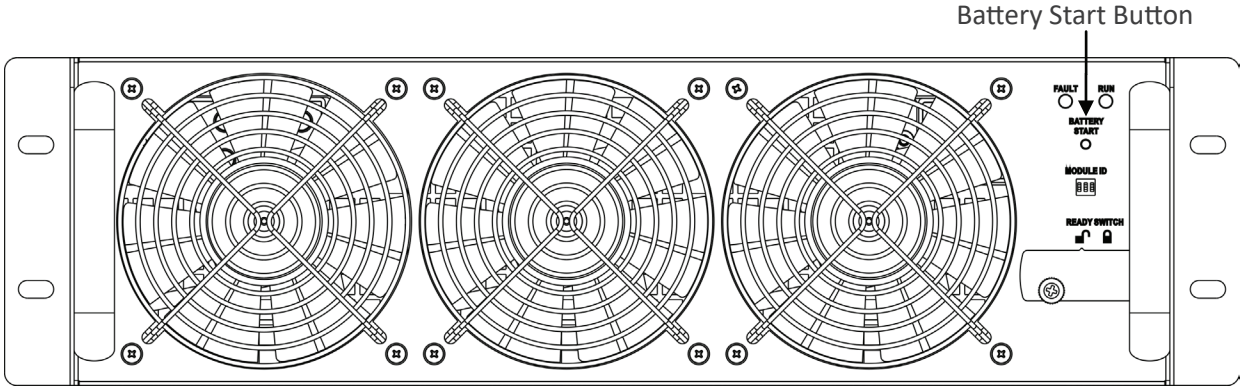

Step 3: After pressing the "Battery Start" button, UPS will enter into Standby mode. Refer to the diagram below for LCD display.

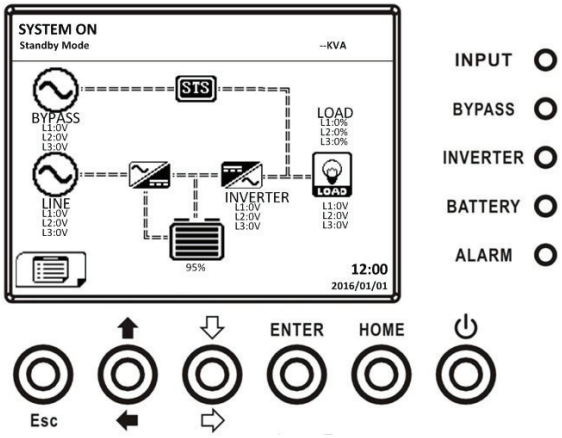

Step 4: Before UPS enters into shutdown mode, please press "Power On/Off" button for 2 seconds immediately as shown in the diagram below.

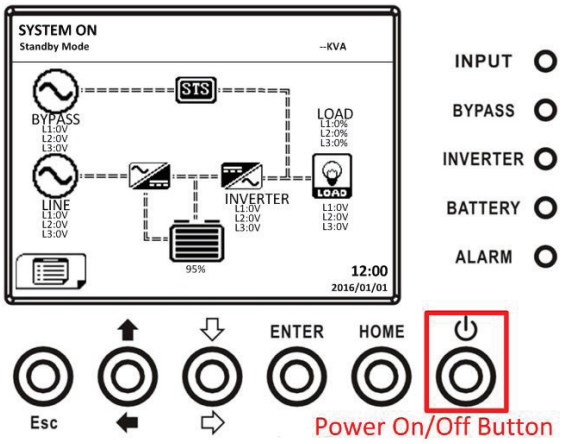

Step 5: Then, UPS will enter Battery Mode as shown in the diagram below.

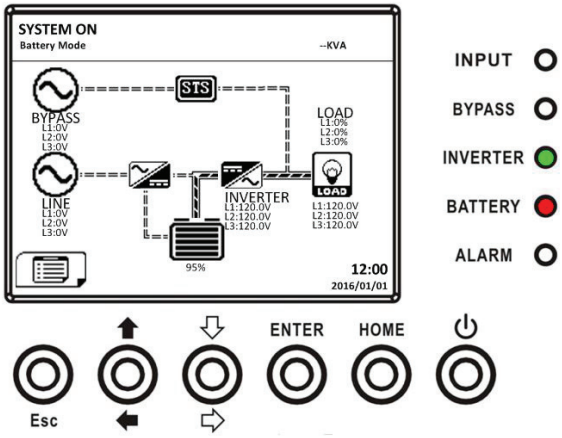

Step 6: Switch ON the output breaker (Q3). Cold start startup procedure is complete.

Maintenance Bypass Operation

Follow the instruction to transfer to Maintenance Bypass and UPS protection as below.

Transfer to Maintenance Bypass

Step 1: Remove the mechanical lock plate of Maintenance Bypass Breaker.

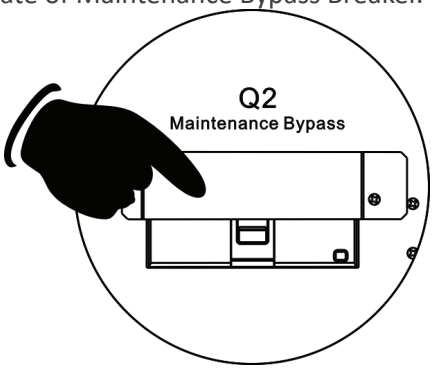

Step 2: Make sure the UPS operates in Bypass mode as shown below.

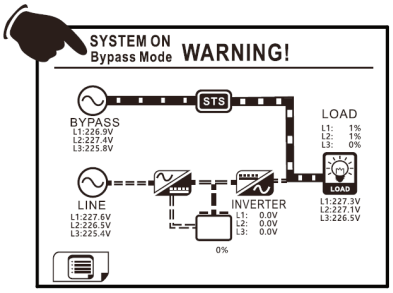

Step 3: Switch ON the Maintenance Bypass Breaker as shown below.

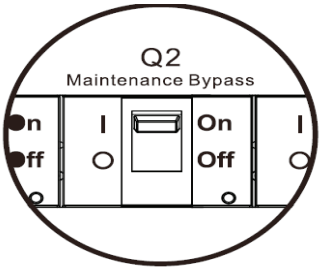

Step 4: Switch OFF the Main Breaker (Q1) as shown below.

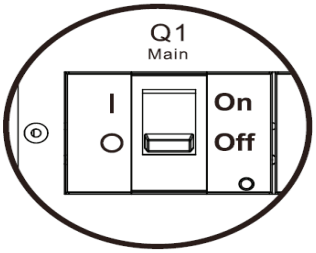

Step 5: Switch OFF the Output Breaker (Q3) as shown below.

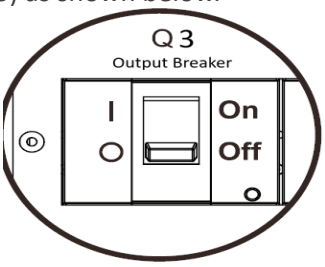

Step 6: It is possible to change the PCBA of STS and Power Module.

Transfer to UPS Protection

Step 1: Make sure the maintenance is complete. The Power Modules have been installed well.

Step 2: Switch ON the Output Breaker (Q3) as shown below.\

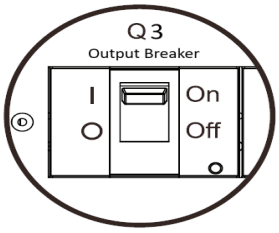

Step 3: Switch ON the Main Breaker (Q1) as shown below.

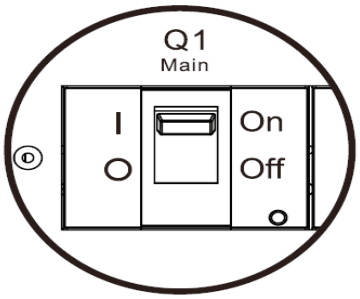

Step 4: Please enter LCD SETUP MENU and choose "SYSTEM" to ensure that the "Bypass mode" is enabled. If the "Bypass mode" is disabled, you have to set it enabled. Then, exit the SETUP menu and check if the UPS operates in bypass mode.

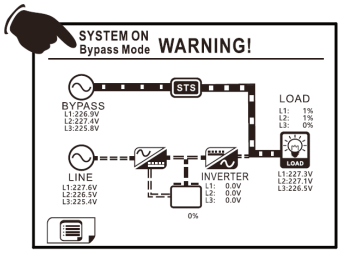

Step 5: Turn off Maintenance Bypass Breaker as shown below.

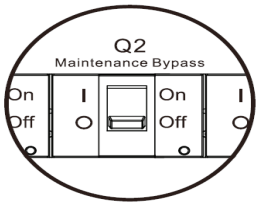

Step 6: Lock back the mechanical lock plate as shown below.

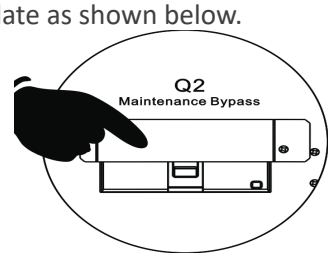

Turn off Operation

Bypass Mode/ Standby Mode Turn Off Operation

When the UPS neither is turned on nor turned off, the UPS operates in the Standby Mode or Bypass Mode. It depends on the "Bypass Mode" Setting.

The LCD diagrams are shown below.

Bypass Mode Setting is Disabled **Bypass Mode Setting is Enabled**

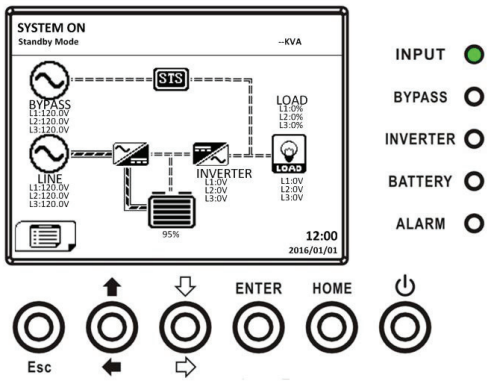

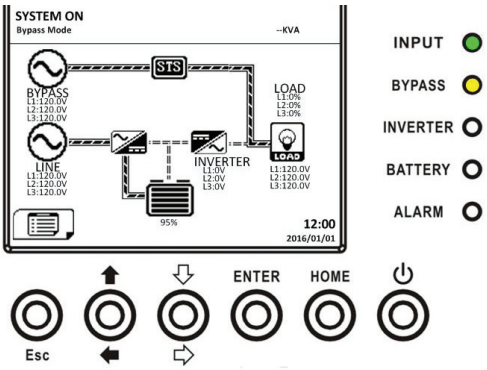

Step 1: Switch OFF the Main Breaker. The LCD diagrams are shown below.

Bypass Mode Setting is Disabled

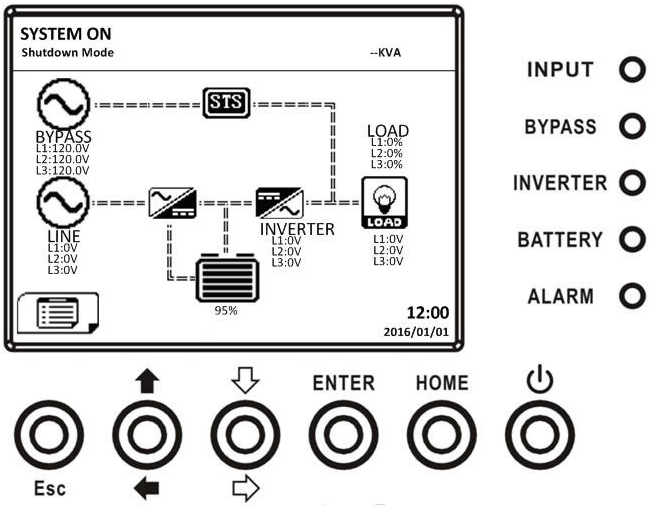

UPS enters Shutdown Mode.

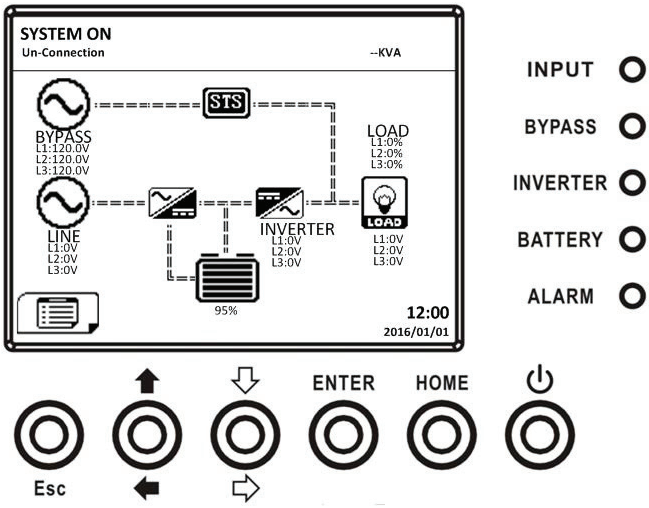

It is normal the Un-Connection is shown when Power Modules have shut off their control power.

Bypass Mode Setting is Enabled

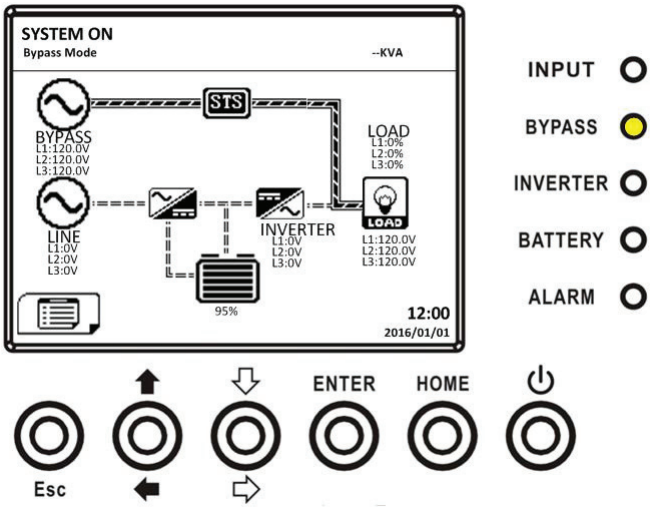

UPS stays in Bypass mode and No AC input is indicated.

Step 2: Switch OFF the external power switch to disconnect the AC power to the UPS. Wait until the LCD is OFF.
Step 3: Switch OFF the battery breaker, if the UPS will disconnect the AC power for a long time.

Line Mode Turn Off Operation
The LCD diagrams are shown below when the UPS operates in the Line Mode.

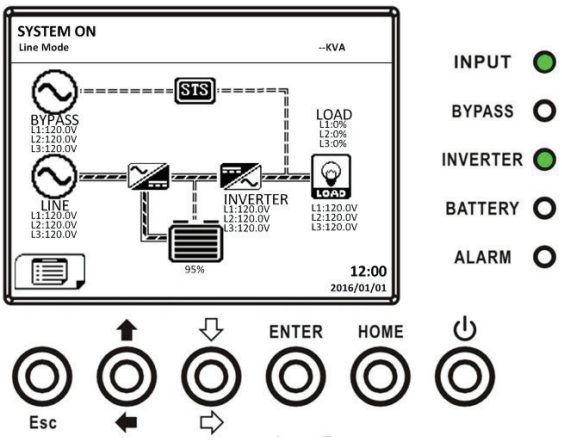

Press "Power On/Off" button for 2 seconds to turn off the UPS. Or use the Menu-Control-System Turn Off to turn off the UPS.

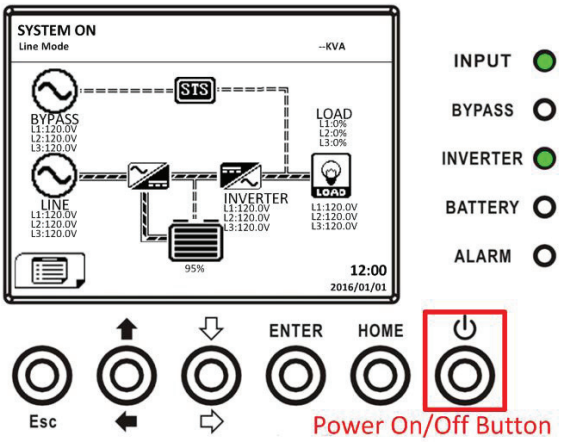

After turned off, the UPS will transfer to Standby Mode or Bypass Mode. It depends on the "Bypass Mode" Setting. Next, follow the B**ypass Mode/ Standby Mode Turn Off Operation** procedure.

Battery Mode Turn Off Operation
The LCD diagram is shown below when the UPS operates in the Battery Mode.

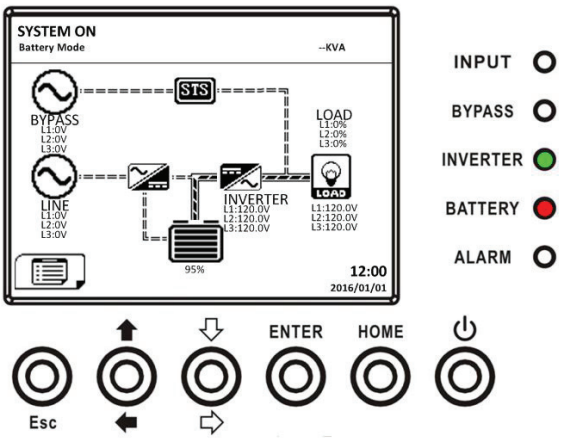

Press "Power On/Off" button for 2 seconds to turn off the UPS. Or use the Menu-Control-System Turn Off to turn

off the UPS.

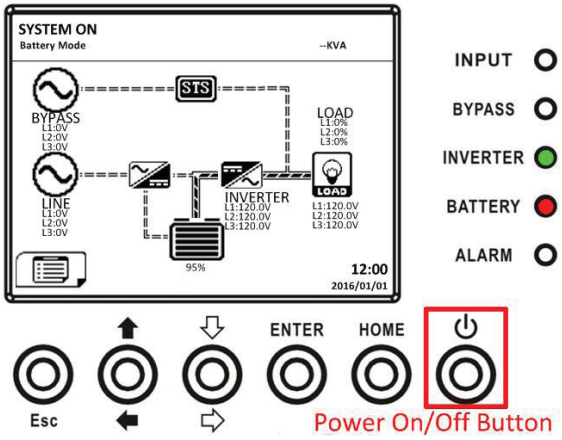

After turning off, the UPS will tranfer to Standby Mode.
Next, follow the **Bypass Mode/ Standby Mode Turn Off Operation** procedure.

Control Panel and Display Description

Introduction

This control panel and display description are located at the front door of the UPS. It is the USER control, monitoring of all measured parameters, UPS and battery status and alarms. The control panel and display description are divided into four functional areas: (1) LCD display, (2) LED indications, (3) Control keys, (4) Audio Alarm.

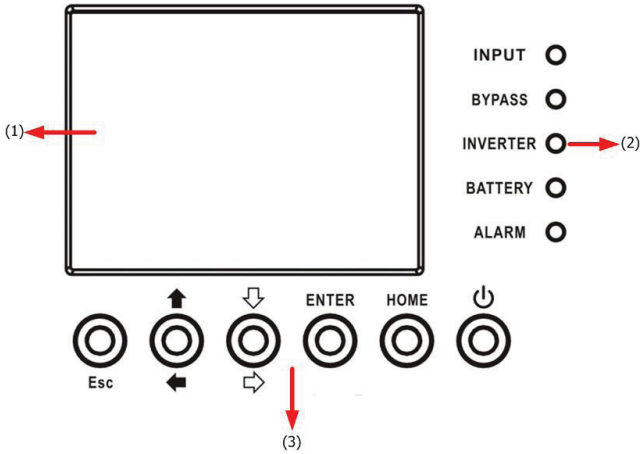

Control panel

1. LCD display: Graphic display and all measured parameters.
2. LED indications.
3. Control keys.

LED indications

LED	Color	Status	Definition
INPUT	Green	On	Input source is normal.
		Flashing	Input source is abnormal.
		Off	No input source

BYPASS	Yellow	On	Load on Bypass.
		Flashing	Input source is abnormal.
		Off	Bypass not operating.
INVERTER	Green	On	Load on inverters.
		Off	Inverters not operating.
BATTERY	Red	On	Load on Battery.
		Flashing	Low battery
		Off	Battery converter is normal and battery is charging.
ALARM	Red	On	UPS fault.
		Flashing	UPS alarm.
		Off	Normal.

Function Keys

Control Key	Description
Esc	• When screen is in Main screen, it will enter into main menu by pressing ESC key. • Return to previous screen, when screen is not in Main screen. • Return to previous value in the same row, so you can change it. For example, when changing 4-digit password, press "Esc" to allow cursor back to previous digit.
(Up) (Left)	Key for menu page navigation or digit modification.
(Down) (Right)	Key for menu page navigation or digit modification.
Enter	Confirmation of commands, or cursor displacement.
Home	Return to Main screen.
Power On/Off	Turn on UPS or Turn off UPS.

Audible Alarm

Audio Type	Description
Power on/off	Buzzer sounds two seconds.
Battery mode	Buzzer sounds every 2 seconds.
Low battery	Buzzer sounds every half seconds.
UPS alarm	Buzzer sounds every 1 second.
UPS fault	Buzzer continuously sounds.

Adjust the viewing angle of LCD panel

Following the steps below, you can adjust the LCD viewing angle.

Step 1: Remove the screw (A).

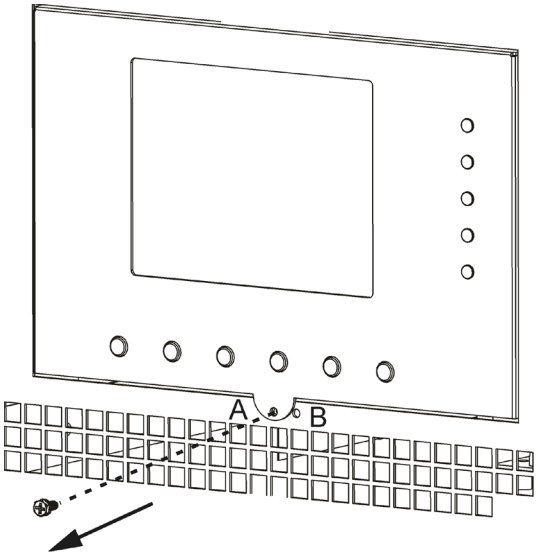

Remove the screw (A)

Step 2: Lift the panel and fix the screw back at (B).

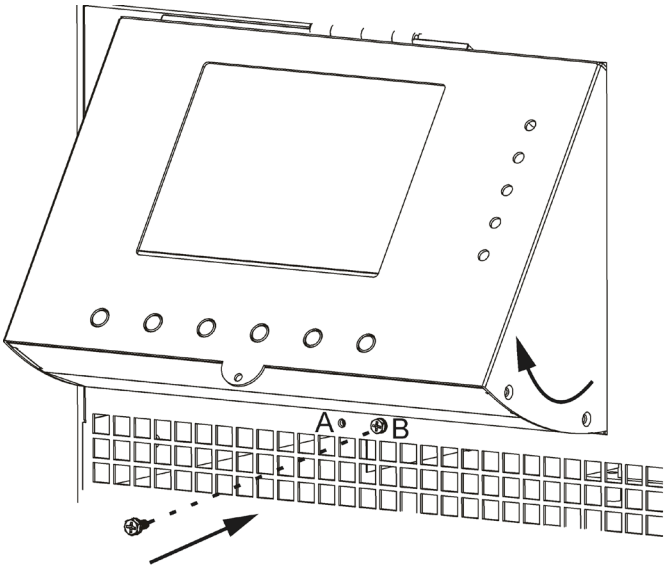

Lift the panel, and fix the screw back

Screen Description

Start Screen

Upon starting, the UPS executes self-test. The initial screen displays and remains still in approximately 5 seconds as shown below.

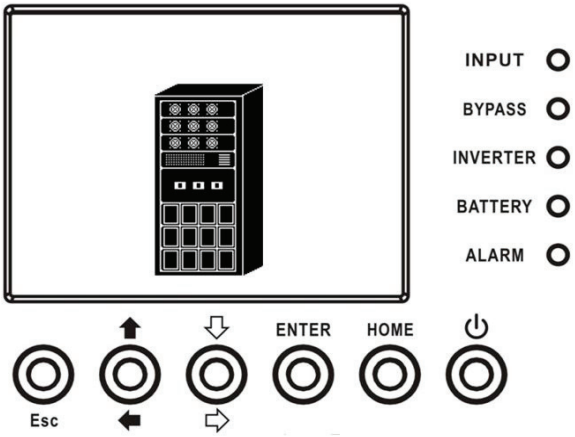

Initial screen

Main Screen

After initialization, the main screen will display as shown below. Main screen is divided into five parts.

1. UPS Mode: Current Operation Mode.
2. UPS Flow Chart: Current flow chart and measurement data.
3. Menu: Press ESC button to enter Menu screen.
4. UPS model name with power rating. If the power rating followed with (R), it means the UPS system is in redundant configuration.
5. Date and Time.

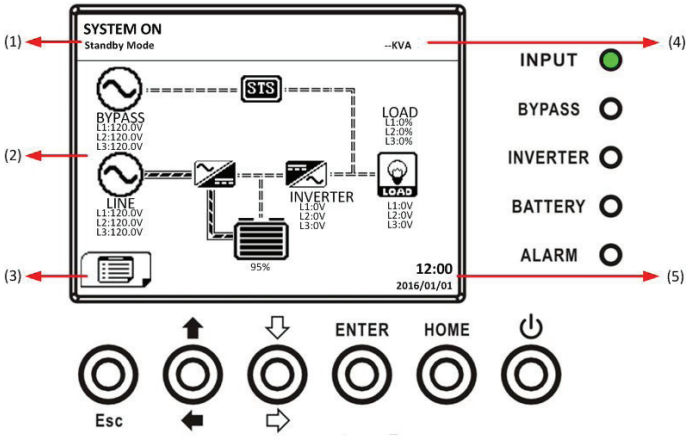

Main screen

MENU Screen

In the Main Screen, press ESC button to enter the **MENU** screen. Use UP and DOWN buttons to choose different menus, and Press ENTER to enter the sub screen.

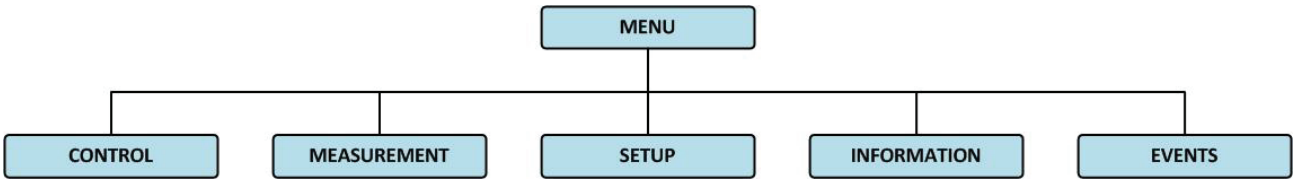

Menu tree

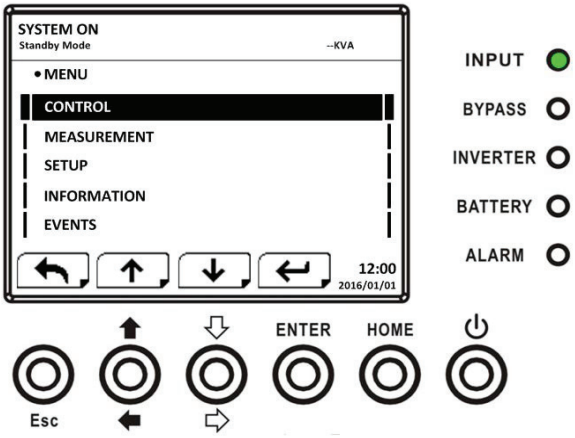

Menu screen

Control Screen

Use UP and DOWN buttons to choose CONTROL option, and press ENTER button to enter the submenu.

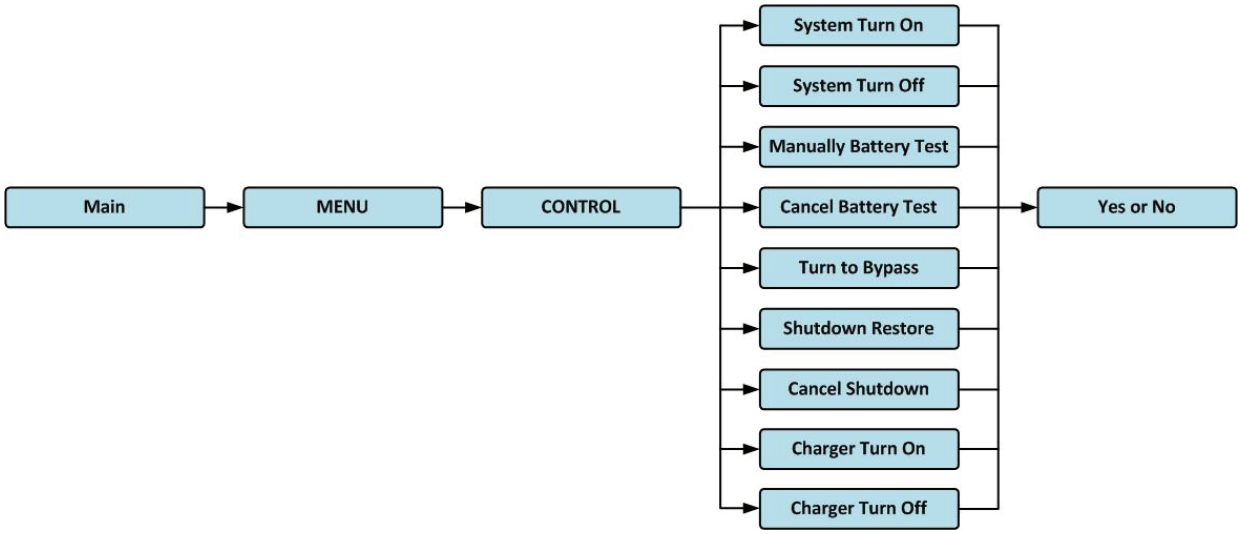

Control menu

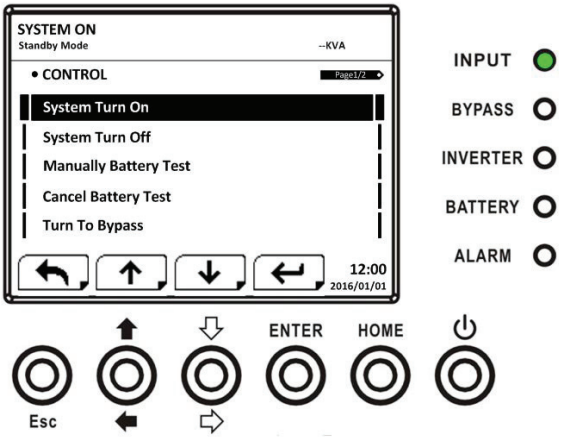

Control screen page 1

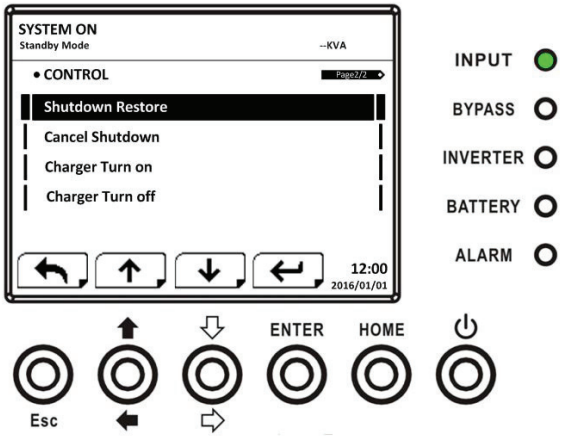

Control screen page 2

When the control option is selected by pressing ENTER button, the confirmation screen will pop up. Use LEFT and RIGHT buttons to choose YES or NO. Choose YES and press ENTER button to confirm command or choose NO to cancel command.

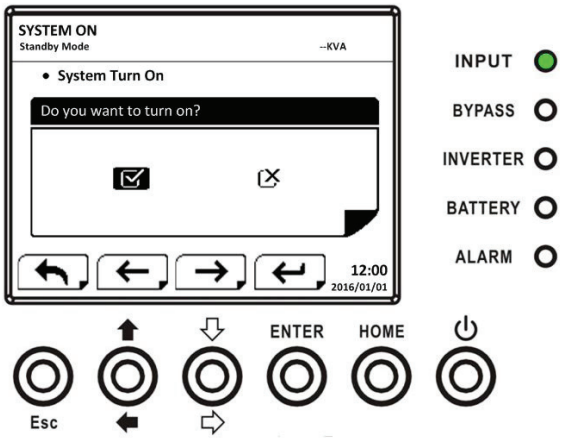

Confirmation screen

Measurement Screen

Use UP and DOWN buttons to choose MEASUREMENT option, and press ENTER button to go into the submenu.

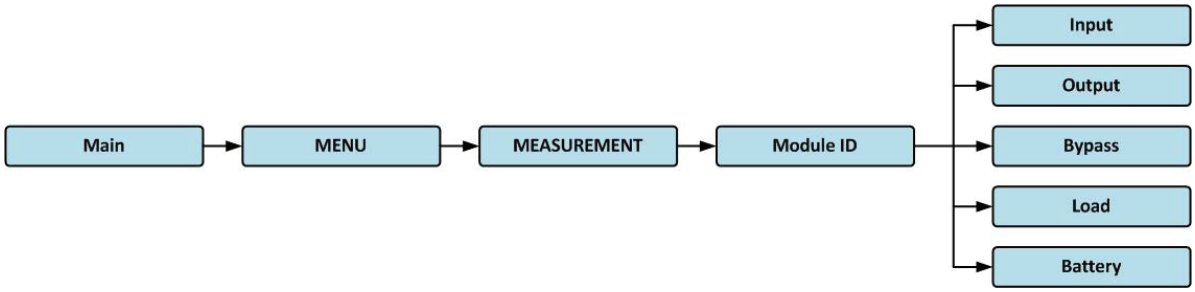

Measurement menu

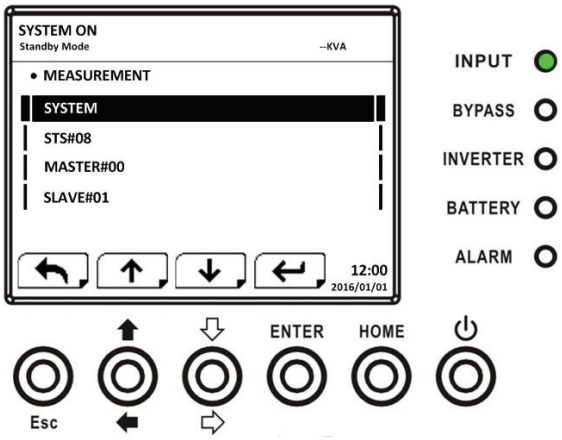

Measurement Menu Screen

Use UP and DOWN buttons to choose System, STS, Power Module option, and press ENTER button to go into the submenu.

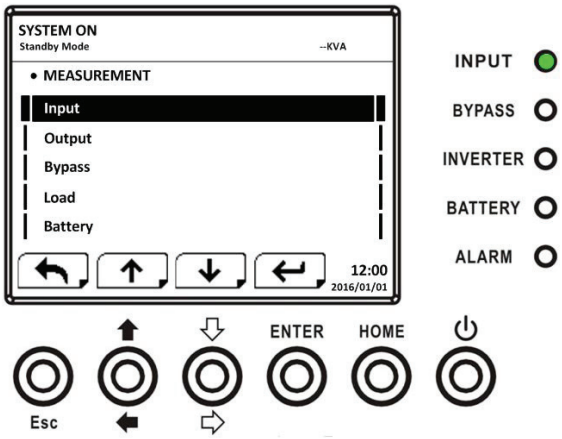

Measurement source selection Screen

Use UP and DOWN buttons to choose Input, Output, Bypass, Load, and Battery option, and press ENTER button to go into submenu. The measurement can be read as listed in the table below.

Measurement data

Menu	Item	Explanation
Input	L-N Voltage (V)	Input phase voltage (L1, L2, L3). Units 0.1V.
	Frequency (Hz)	Input Frequency (L1, L2, L3). Units 0.1Hz.
Output	L-N Voltage (V)	Output phase voltage (L1, L2, L3). Units 0.1V.
	L-N Current (A)	Output phase current (L1, L2, L3). Units 0.1A.
	Frequency (Hz)	Output Frequency (L1, L2, L3). Units 0.1Hz.
	Power Factor	Output Power Factor (L1, L2, L3).
Bypass	L-N Voltage (V)	Bypass phase voltage (L1, L2, L3). Units 0.1V.
	Frequency (Hz)	Bypass Frequency (L1, L2, L3). Units 0.1Hz.
	Power Factor	Bypass Power Factor (L1, L2, L3).
Load	Sout (KVA)	Apparent power. Units 0.1KVA.
	Pout (KW)	Active power. Units 0.1KW.
	Load Level (%)	The percentage of the UPS rating load. Units 1%.

Battery	Positive Voltage (V)	Battery Positive Voltage. Units 0.1V.
	Negative Voltage (V)	Battery Negative Voltage. Units 0.1V.
	Positive Current (A)	Battery Positive Current. Units 0.1A.
	Negative Current (A)	Battery Negative Current. Units 0.1A.
	Remain Time (Sec)	Battery run time remaining. Units 1sec.
	Capacity (%)	The percentage of the capacity of the battery. Units 1%.
	Test Result	Battery test result
	Charging Status	Battery charging status
	Temperature1(°C)	Battery cabinet temperature of STS. Units 0.1°C.
	Temperature2(°C)	Battery cabinet temperature of extra communication card T1. Units 0.1°C.
	Temperature3(°C)	Battery cabinet temperature of extra communication card T2. Units 0.1°C.
	Temperature4(°C)	Battery cabinet temperature of extra communication card T3. Units 0.1°C.
	Temperature5(°C)	Battery cabinet temperature of extra communication card T4. Units 0.1°C.

Setup Screen

Use UP and DOWN buttons to choose SETUP options. It's required to enter password to access General, SYSTEM, BATTERY and PRE-ALARM sub-menus.

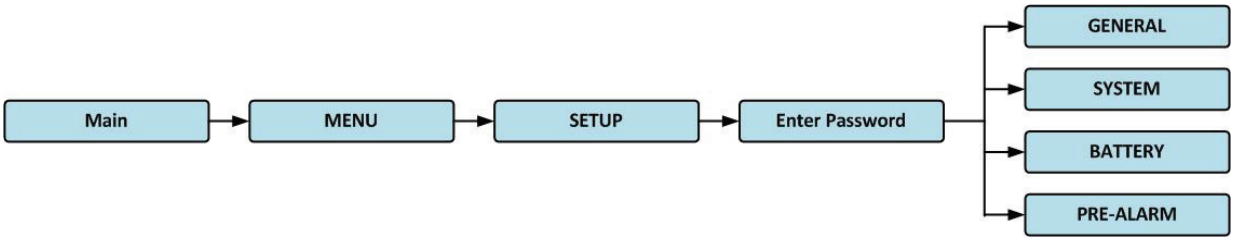

Setup menu

When the SETUP option is selected by pressing ENTER button, a screen requesting to enter password will pop up.

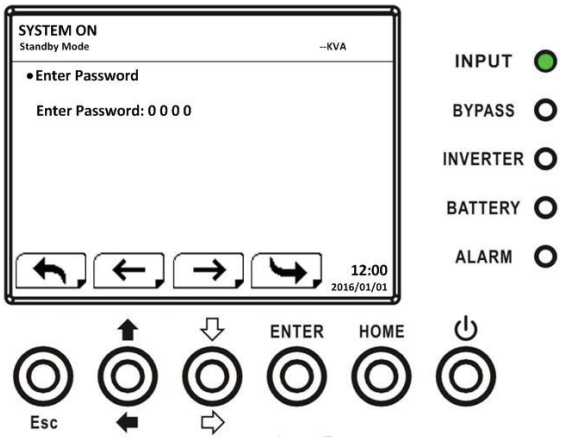

Enter password Screen

It's required to enter 4-digit password to enter SETUP submenu. If incorrect password is entered, the LCD screen will ask for re-entery. If correct password is entered, the LCD will enter the SETUP submenu.

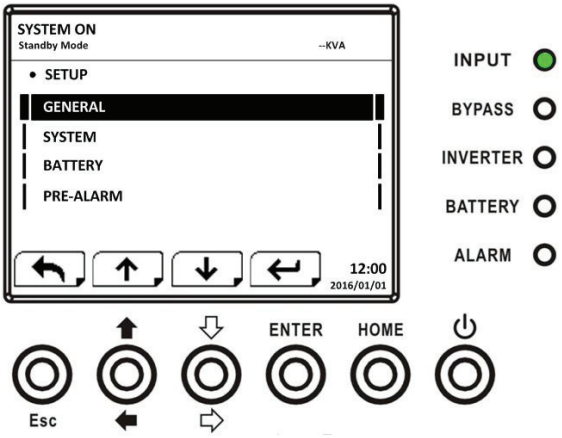

SETUP Submenu Screen

There are two levels of password protection: user password and maintainer password. The default password for user is "0000". It could be change by user. The manitainer password is owned by service personnel. Entering different level of password can access to different settings. The setting can be changed in different operation mode.

All setting items in Setup Menu

Setting item		Standby Mode	Bypass Mode	Line Mode	Battery Mode	Battery Test Mode	Fault Mode	Con-verter Mode	ECO Mode	Authorization	
										User	Main-tainer
General	Model Name	Y	Y	Y	Y	Y	Y	Y	Y		Y
	Language	Y	Y	Y	Y	Y	Y	Y	Y	Y	Y
	TIME	Y	Y	Y	Y	Y	Y	Y	Y		Y
	Change Password	Y	Y	Y	Y	Y	Y	Y	Y	Y	Y
	Baud Rate	Y	Y	Y	Y	Y	Y	Y	Y	Y	Y
	Audible Alarm	Y	Y	Y	Y	Y	Y	Y	Y	Y	Y
	Factory Reset	Y									Y
	EEPROM Reset	Y									Y
	EPO Function	Y									Y
	Save Setting	Y	Y							Y	Y
System	Output Voltage	Y	Y								Y
	Bypass Voltage Range	Y	Y	Y	Y	Y	Y	Y	Y		Y
	Bypass Frequency Range	Y	Y								Y
	Converter Mode	Y									Y
	ECO Mode	Y	Y	Y					Y		Y
	Bypass Mode	Y	Y								Y
	Auto-Restart	Y	Y	Y	Y	Y	Y	Y	Y		Y
	Cold Start	Y	Y	Y	Y	Y	Y	Y	Y		Y
	Battery Mode Delay Time	Y	Y	Y			Y	Y	Y		Y
	System Shutdown Time	Y	Y	Y	Y	Y	Y	Y	Y		Y
	System Restore Time	Y	Y	Y	Y	Y	Y	Y	Y		Y
	Redundancy	Y	Y	Y	Y	Y	Y	Y	Y		Y
	Charger Test	Y	Y	Y				Y	Y		Y

Battery	Nominal Battery Voltage	Y	Y								Y
	Battery Capacity in Ah	Y	Y	Y			Y	Y	Y		Y
	Maximum Charging Current	Y	Y								Y
	Battery Low/Shutdown Setting	Y	Y	Y			Y	Y	Y		Y
	Periodic Battery Test	Y	Y	Y	Y	Y	Y	Y	Y		Y
	Battery Test Interval	Y	Y	Y	Y	Y	Y	Y	Y		Y
	Stop by Time	Y	Y	Y	Y		Y	Y	Y		Y
	Stop by Battery Voltage	Y	Y	Y	Y		Y	Y	Y		Y
	Stop by Battery Capacity	Y	Y	Y	Y		Y	Y	Y		Y
	Battery Age Alert	Y	Y	Y	Y	Y	Y	Y	Y		Y
	Temperature Compensation	Y	Y	Y	Y	Y	Y	Y	Y		Y
	Pre-Alarm	Y	Y	Y	Y	Y	Y	Y	Y		Y

"Y" means that this setting item can be set in this operation mode.

Setup-General Screen

Use UP and DOWN buttons to choose between different sub-menus, and press ENTER button to go into the GENERAL setting screen. General setting can be set in any operating mode.

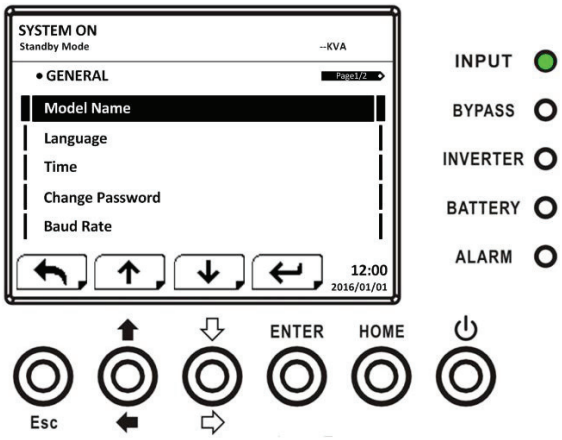

Setup-General Screen page 1

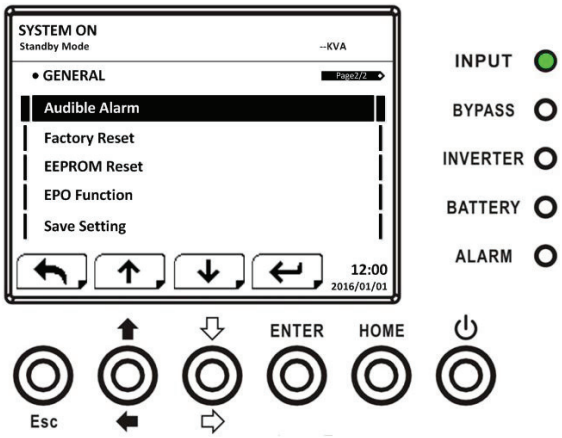

Setup-General Screen page 2

Use LEFT and RIGHT buttons to choose the setting options for setting requirement, then press ENTER. The confirmation screen will pop up, use LEFT and RIGHT buttons to choose YES or NO. Choose YES and press ENTER button to confirm setting or choose NO to cancel the setting.

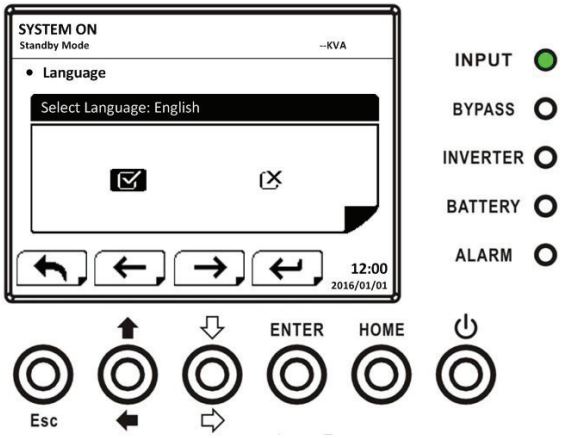

SETUP Confirmation screen

Setup-General setting list

Setting Item	Sub Item	Explanation
Model Name		Set UPS Name (xxxxxxxxxx). The max. length is 10 characters.
Language	--	Provides 3 optional LCD languages: • English (Default) • Traditional Chinese • Simplified Chinese
TIME	Adjust Time	Set current date and time. (yyyy / mm / dd hour : min : sec) **MUST be set after UPS installation**
	System Installed Date	Set system installed date (yyyy / mm / dd) 2015/1/1 (Default) **MUST be set after UPS installation**
	System Last Maintain Date	Set system latest maintenance date (yyyy / mm / dd) **MUST be set after UPS installation**
	Battery Installed Date	Set battery installed date(yyyy / mm / dd) **MUST be set after UPS installation**
	Battery Last Maintain Date	Set battery latest maintenance date(yyyy / mm / dd) **MUST be set after UPS installation**
Change Password	--	Set New Password. 0000 (Default)
Baud Rate	--	Set COM Port0 Baud Rate • 2400 (Default) • 4800 • 9600 Set COM Port1 Baud Rate • 2400 (Default) • 4800 • 9600

Audible Alarm	--	Set Audible Alarm • Disable • Enable (Default)
Factory Reset	--	Restore to factory default setting
EEPROM Reset	--	Set EEPROM default
EPO Function	--	Set EPO active status • Normal Close Active • Normal Open Active (Default)
Save Setting	--	Save EEPROM **Use this feature to save the setting(s) you have done.**

EEPROM Reset Category list

Setting Item		Factory Reset	EEPROM Reset
General	Model Name		
	Language	Y	Y
	Adjust Time		
	System Installed Date		Y
	System Last Maintain Date		Y
	Battery Installed Date		Y
	Battery Last Maintain Date		Y
	Change Password		Y
	Baud Rate		Y
	Audible Alarm	Y	Y
	Factory Reset	--	--
	EEPROM Reset	--	--
	EPO Function		Y
	Save Setting	--	--
System	Output Voltage		Y
	Bypass Voltage Range	Y	Y
	Bypass Frequency Range	Y	Y
	Converter Mode	Y	Y
	ECO Mode	Y	Y
	Bypass Mode	Y	Y
	Auto-Restart	Y	Y
	Cold Start		Y
	Battery Mode Delay Time	Y	Y
	System Shutdown Time	Y	Y
	System Restore Time	Y	Y
	Redundancy		Y
	Charger Test	--	--

Battery	Nominal Battery Voltage	Y	Y
	Battery Capacity in Ah	Y	Y
	Maximum Charging Current	Y	Y
	Battery Low/Shutdown Setting	Y	Y
	Periodic Battery Test	Y	Y
	Battery Test Interval	Y	Y
	Stop by Time	Y	Y
	Stop by Battery Voltage	Y	Y
	Stop by Battery Capacity	Y	Y
	Battery Age Alert	Y	Y
	Temperature Compensation	Y	Y
Pre-Alarm			Y

Setup-System Screen

Use UP and DOWN buttons to choose between different sub-menus, and press ENTER button to go into the SYSTEM setting screen.

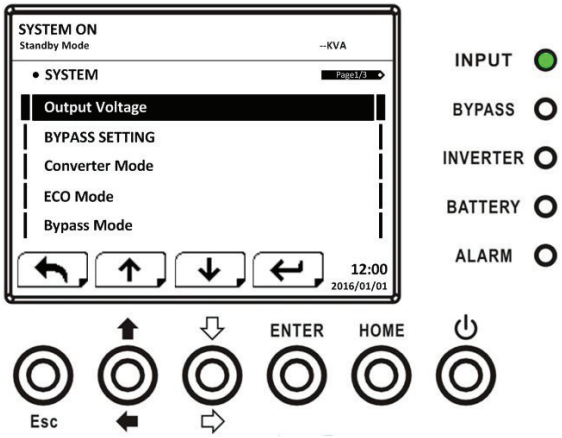

Setup-System Screen page 1

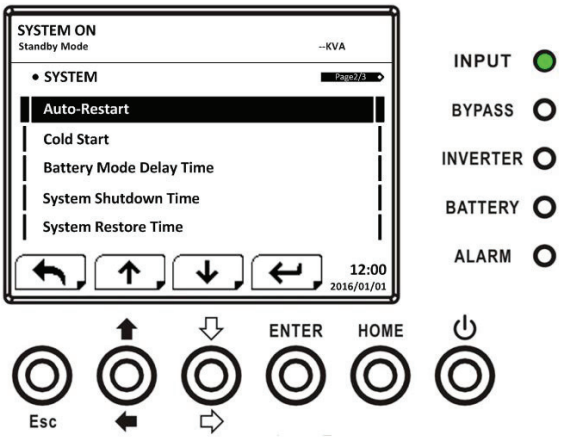

Setup-System Screen page 2

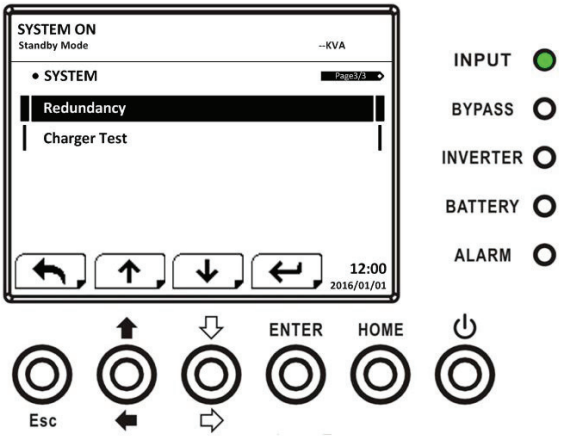

Setup-System Screen page 3

System setting can be set only when UPS is operating in certain mode. If it's not set up in specific mode, the warning screen will appear.

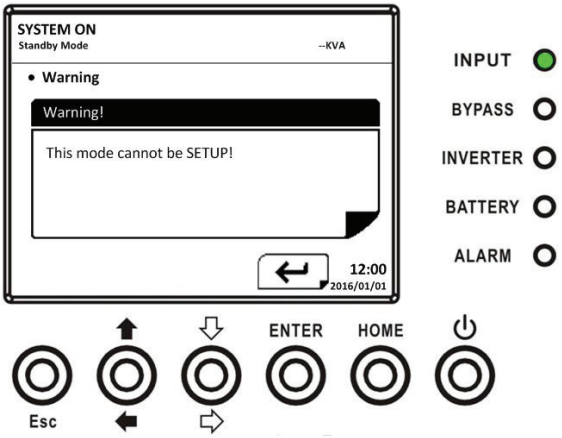

Warning screen

Setup-System setting list

Setting Item	Sub Item	Explanation
Output Voltage	--	Set output voltage • 120Vac (Default) • 127Vac **MUST be reviewed after UPS installation**
BYPASS SETTING	Bypass	Set bypass voltage range: Upper limit • +10% • +15% (Default) • +20% Lower limit • -10% • -20% (Default) • -30%
	Voltage	Set bypass Frequency range: Upper/ Lower limit • +/- 1Hz • +/- 2Hz • +/- 4Hz (Default)

Converter Mode	--	Set converter mode • Disable (Default) • Enable
ECO Mode	--	Set ECO mode • Disable (Default) • Enable
Bypass Mode	--	Set bypass mode • Disable (Default) • Enable **MUST be reviewed after UPS installation.** If you need the Bypass power when UPS is OFF, please enable it.
Auto-Restart	--	Set auto-restart • Disable • Enable (Default) After "Enable" is set, once UPS shutdown occurs due to low battery and then utility restores, the UPS will return to line mode.
Cold Start	--	Set cold start • Disable • Enable (Default) After "Enable" is set, the UPS can be turned on without connecting to utility by pressing Battery Start Button. Refer to cold start operation for the details.
Battery Mode Delay Time	--	Set system shutdown delay time in battery mode (0~9990sec). • 0: Disable (Default) • Not 0: Enable When this feature is enabled, UPS will shut off output after UPS operates in Battery mode for certain seconds.
System Shutdown Time	--	Set system shutdown time (0.2~99min) • 0.2 min (Default) This delay time will start counting when the CONTROL-Shutdown Restore command is executed.
System Restore Time	--	Set system restore time (0~9999min) • 1 min (Default) This delay time will start counting after shutdown time is elapsed when the CONTROL-Shutdown Restore command is executed.
Redundancy	--	Set total power and redundancy Total Power: the QTY of Power Modules Redundancy: the QTY of redundant power module **MUST be set after UPS installation or the QTY of Power Module is changed**
Charger Test	--	Set charger test • Disable (Default) • Enable

Setup-Battery Screen

Use UP and DOWN buttons to switch different sub-menus. Press ENTER button to go into the BATTERY setting screen.

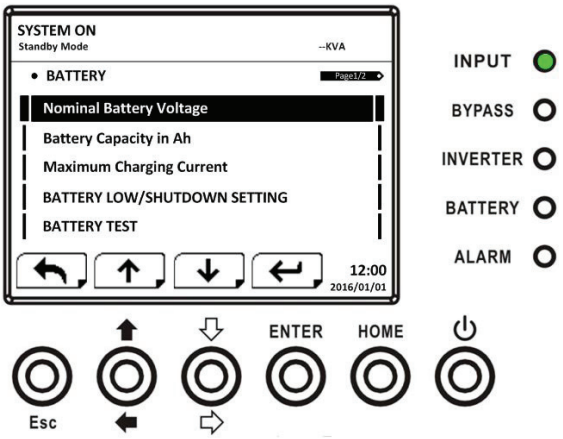

Setup-Battery Screen page 1

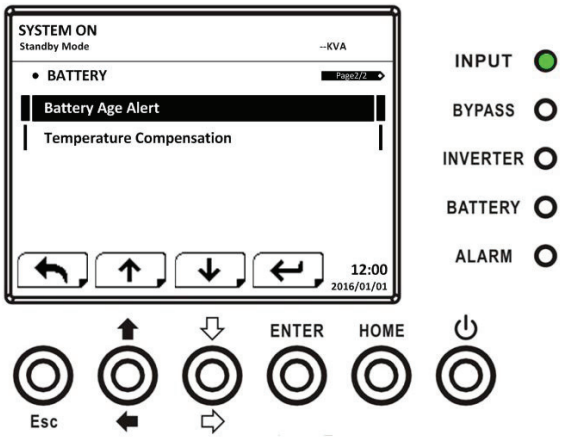

Setup-Battery Screen page 2

Battery setting can be set only when UPS is operating in standby mode. If it's not in standby mode, the warning screen will appear.

Setup-Battery setting list

Setting Item	Sub Item	Explanation
Nominal Battery Voltage	--	Set battery nominal voltage • 10x12V (Default) **MUST be set after UPS installation**
Battery Capacity in Ah	--	Set battery capacity. (0~999) • 9Ah (Default) **MUST be set after UPS installation or Battery capacity is changed.**
Maximum Charging Current	--	Set battery maximum charging current (1~128A) • 2A (Default) **MUST be set after UPS installation or Battery capacity is changed.**

Battery Low/ Shutdown SETTING	Battery Low Voltage	Set battery low voltage (10.5~11.5V)x(battery Number) • 11V x Battery Number (Default)
	Battery Low Capacity	Set battery low capacity (20~50%) • 20% (Default)
	Battery Shutdown Voltage	Set battery voltage point for system shutdown in battery mode (10.0~11V) x (battery Number) • 10V x Battery Number (Default)
BATTERY TEST	Periodic Battery Test	Set periodic battery test disable or enable • Disable (Default) • Enable
	Battery Test Interval	Set battery test interval (7~99 Days) • 30 Days (Default)
	Stop by Time	Set testing time for battery test (10~1000sec) • 10 sec (Default)
	Stop by Battery Voltage	Set stop battery voltage in battery test (11~12V) x (battery Number) • 11V x Battery Number (Default)
	Stop by Battery Capacity	Set battery capacity to stop battery-testing. (20~50%) • 20% (Default)
Battery Age Alert	Battery Age Alert (Months)	Set battery age for replacement. (Disable,12~60Months) • Disable (Default) If this feature is enabled and the battery has been installed over this period, there is a warning "Battery Age Alert" to indicate it.
Temperature Compensation	--	Set battery temperature compensation. (0~-5 (mV/°C/cl)) • 0(mV/°C/cl) (Default)

Pre-Alarm Screen

Use UP and DOWN buttons to switch different sub-menus. Press ENTER button to go into the Pre-Alarm setting screen.

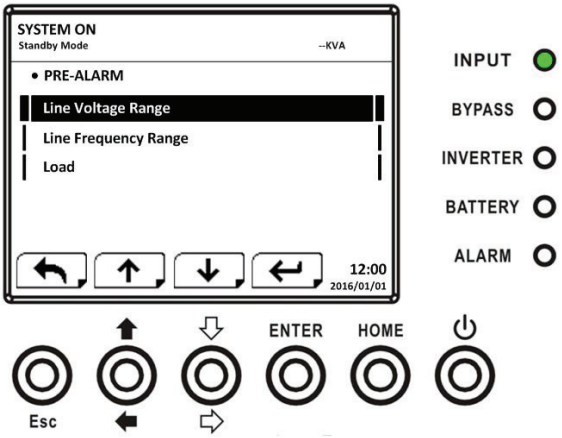

Setup-Pre-Alarm screen

Pre-Alarm setting can be set in any operation mode

Setup-Pre-Alarm setting list

Setting Item	Sub Item	Explanation
Line Voltage Range	--	Set line voltage range: Upper limit • +5% • +10% • +15% • +20% (Default) Lower limit • -5% • -10% • -15% • -20% (Default)
Line Frequency Range	--	Set line frequency range: Upper / Lower limit • +/- 1Hz • +/- 2Hz • +/- 3Hz • +/- 4Hz (Default)
Load	--	Set UPS Overload percentage (40~100%) • 100% (Default) Set UPS load unbalance percentage (20~100%) • 100% (Default)

Information Screen

In INFORMATION menu, you can check the serial number, firmware versions, system configuration and settings of the UPS. There are submenus under the INFORMATION, including Identification, System and Battery.

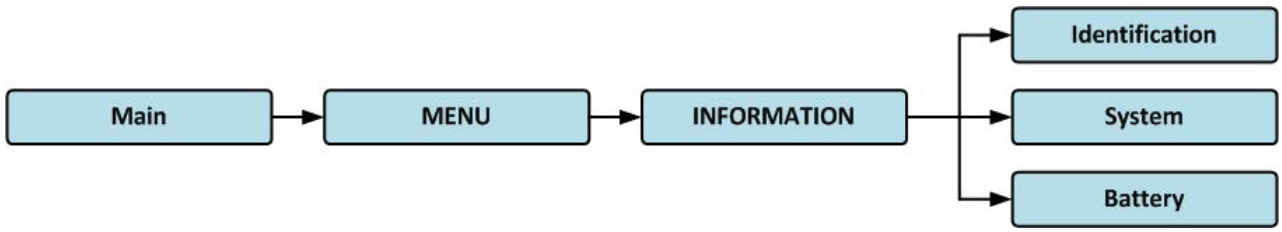

Information menu

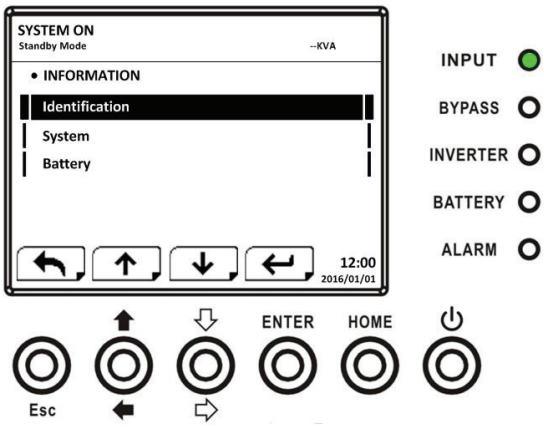

INFORMATION screen

INFORMATION - Identification Screen

When Identification submenu is selected, the Model Name, Serial No. and Firmware Version will be displayed. Use UP and DOWN buttons to switch between different pages.

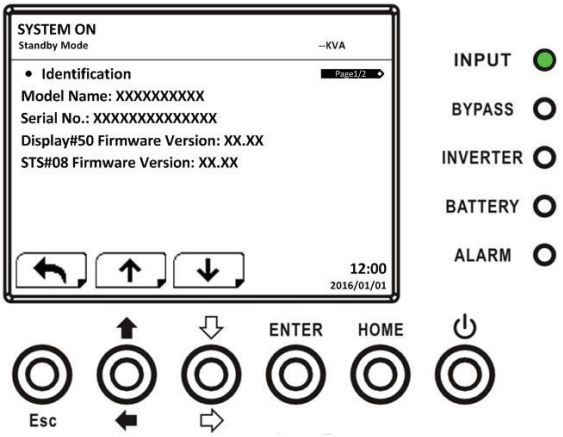

Identification screen page 1

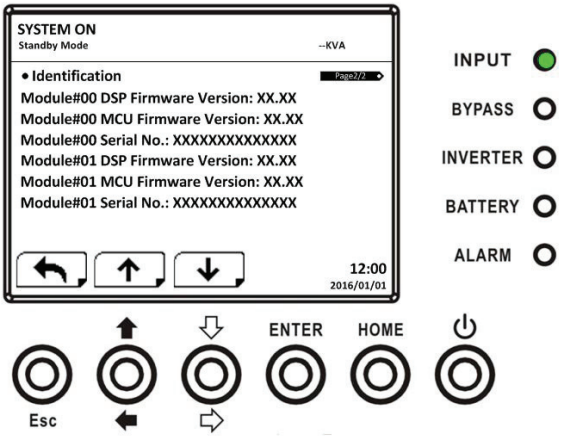

Identification screen page 2

INFORMATION - System Screen

When System submenu is selected, the system power, nominal voltage, nominal frequency … etc. information will be displayed. Use UP and DOWN buttons to switch between different pages.

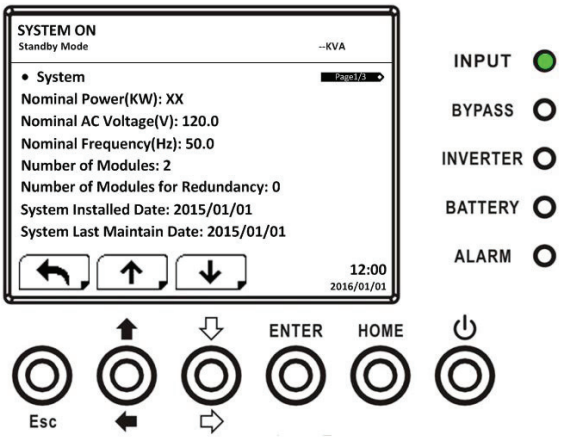

INFORMATION System screen page 1

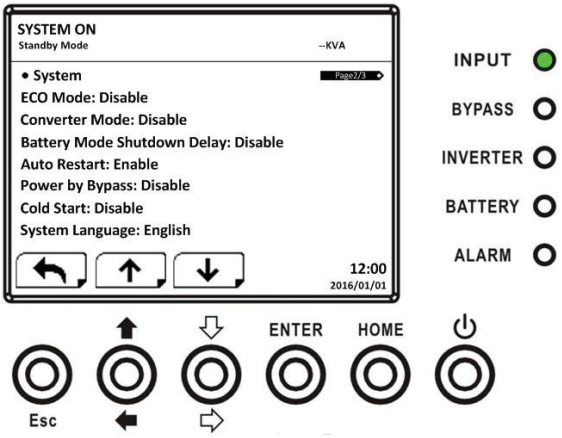

INFORMATION System screen page 2

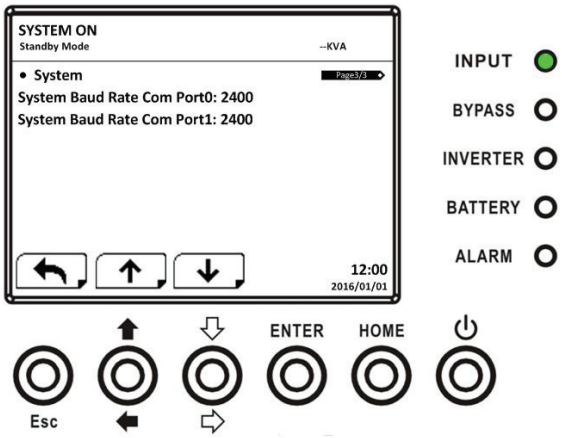

INFORMATION System screen page 3

INFORMATION - Battery Screen

When Battery submenu is selected, the Battery nominal voltage, capacity, charging current … etc. information will be displayed. Use UP and DOWN buttons to switch between different pages.

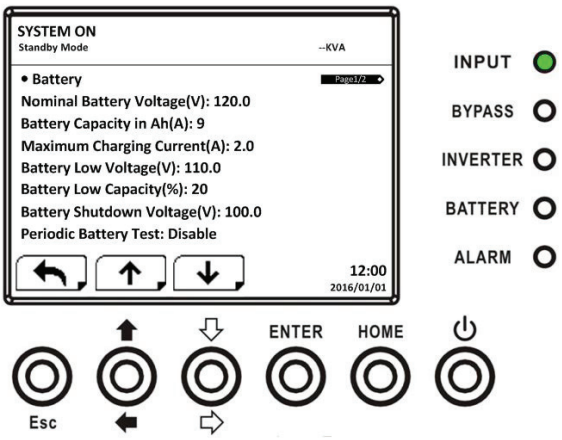

INFORMATION Battery screen page 1

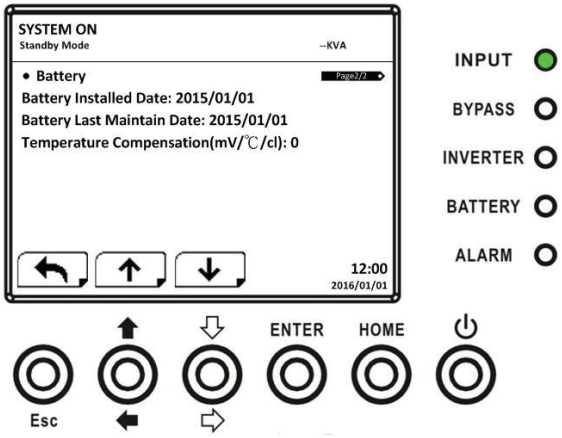

INFORMATION Battery screen page 2

Events Screen

In EVENT menu, you can check the current events, history events and reset all events.

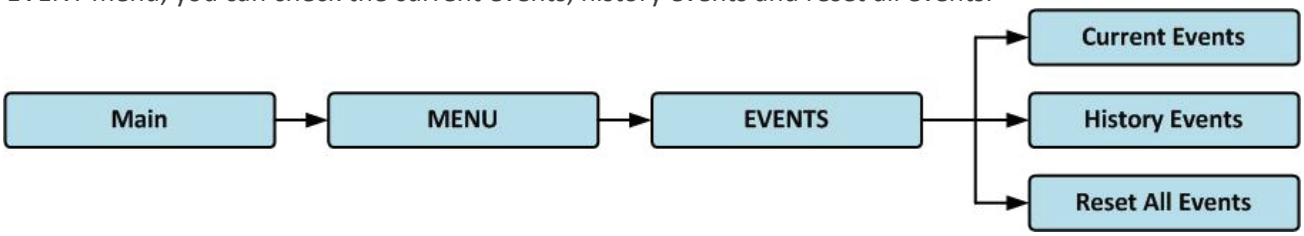

Events menu

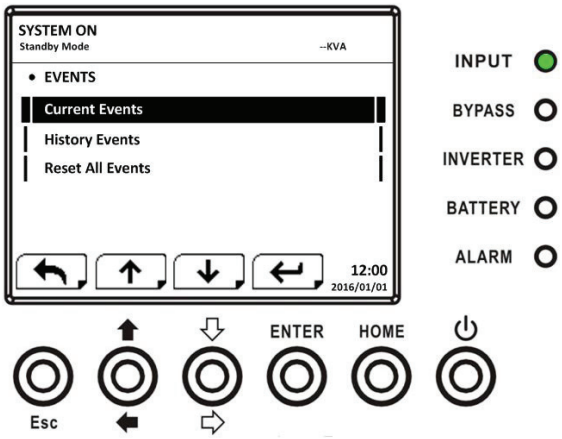

Events screen

When event occurs, you will see flashing warning text in the Main Screen.

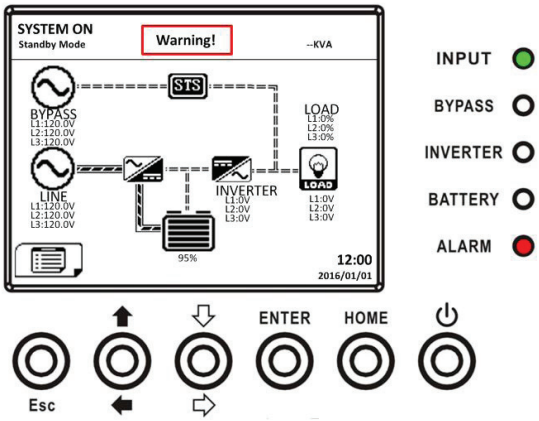

Alarm warning screen

Current Events

When any event occurs, it will display Module ID and alarm code in Current Events screen. It can save up to 50 events in current list. Only 4 events can be listed in one page. Therefore, if it exceeds more than four, you have to press UP or DOWN button to read other events.

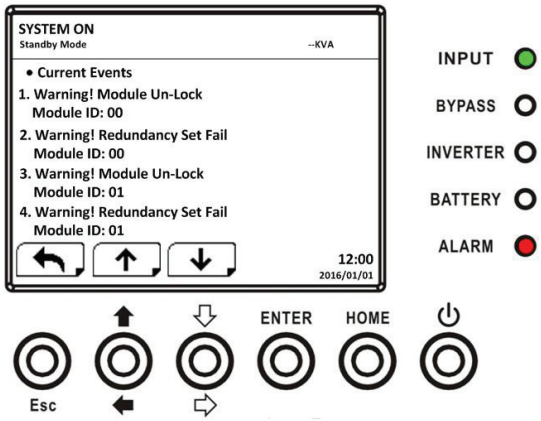

Current Events screen

History Events

The detailed event information is saved in history events. It can save up to 500 events in history events. When warning occurs, it will display alarm code, alarm time and Module ID. When fault event occurs, it will display alarm code, alarm time, Module ID and data 1~2. In order to record more historical information about the UPS system, the important setting changed, UPS operation mode changes and control action executes will be saved in History Events.

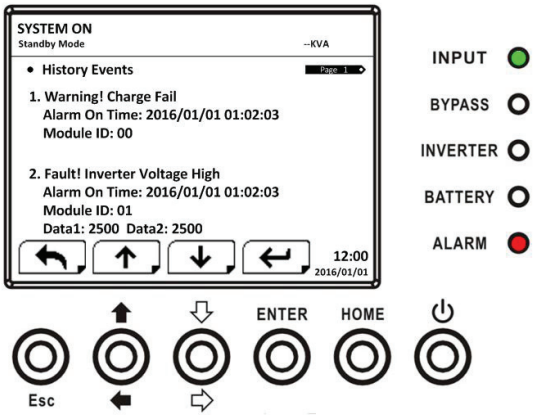

History Events screen

Reset All Events

The Maintainer password is required to enter Reset All Events screen as shown in Figure 4-42. Then, use LEFT and RIGHT buttons to choose YES or NO. Choose YES and press ENTER button to reset all events or choose NO to cancel this action.

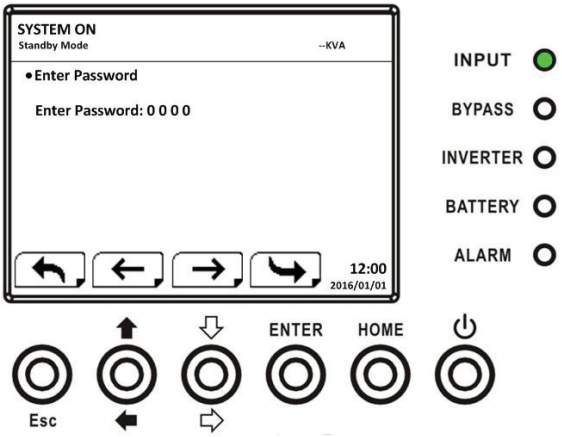

Reset All Events screen

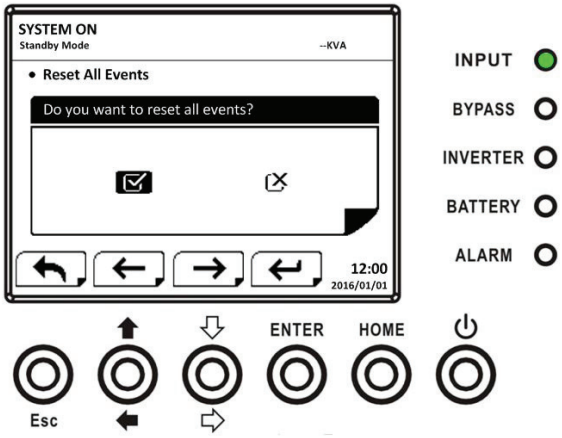

Reset All Events Confirmation screen

Alarm List

The table below provides the complete list of UPS alarm messages.

Alarm List

Representation in display LCD	Explanation
Fault! Bus Over Voltage	DC bus voltage is too high
Fault! Bus Under Voltage	DC bus voltage is too low
Fault! Bus Voltage Unbalance	DC bus voltage is not balanced
Fault! Bus Short	DC bus is short
Fault! Bus Soft Start Time Out	The rectifiers can't start due to low DC bus voltage within specified duration
Fault! Inverter Soft Start Time Out	Inverter bus voltage cannot reach desired voltage within specified duration
Fault! Inverter Voltage Over	Inverter Voltage is over Peak Value.

Fault! Inverter Voltage High	Inverter Voltage is too high
Fault! Inverter Voltage Low	Inverter Voltage is too Low
Fault! R Inverter Voltage Short	R phase inverter Output is short-circuited.
Fault! S Inverter Voltage Short	S phase inverter Output is short-circuited.
Fault! T Inverter Voltage Short	T phase inverter Output is short-circuited.
Fault! RS Inverter Voltage Short	R-S inverter Output is short-circuited.
Fault! ST Inverter Voltage Short	S-T inverter Output is short-circuited.
Fault! TR Inverter Voltage Short	T-R inverter Output is short-circuited.
Fault! Inverter R Negative Power	R phase inverter Output Negative Power over range
Fault! Inverter S Negative Power	S phase inverter Output Negative Power over range
Fault! Inverter T Negative Power	T phase inverter Output Negative Power over range
Fault! Over Load Fault	Heavy overload causes UPS fault.
Fault! Battery Fault	Batteries reversed
Fault! Over Temperature	Make sure adequate space is allowed for air ventilation and the fan is working
Fault! CAN Fault	CAN communication fault
Fault! TRIG0 Fault	Synchronized trigger signal fault
Fault! Relay Fault	Inverter relay fault
Fault! Line SCR Fail	Line SCR short circuit fault
Fault! EEPROM Fault	EEPROM operation error
Fault! Parallel Cable Loosen Fault	As stated.
Fault! DSP MCU Stop Communicate	As stated.
Fault! Bypass Temperature Fault	As stated
Fault! Bypass SCR Fault	As stated.
Line Fail	Utility lost or abnormal
Line Restore	Utility recovered to normal
Warning! EPO Active	Check the EPO connector
Warning! Over Load Fail	The load devices are demanding more power than the UPS can supply. Line mode will transfer to Bypass mode.
Warning! Communicate CAN Fail	CAN communication error
Warning! Over Load	In Line mode, the load devices are demanding more power than the UPS can supply.
Warning! Battery Open	Battery not connected
Warning! Battery voltage High	Battery voltage is too High
Warning! Module Un-Lock	As stated.
Warning! Turn On Abnormal	As stated.
Warning! Charge Fail	As stated.
Warning! EEPROM Fail	EEPROM operation error
Warning! Fan Lock	As stated.
Warning! Line Phase Error	As stated.
Warning! Bypass Phase Error	As stated.
Warning! N Loss	Neutral loss

Warning! Internal Initial Fail	As stated.
Warning! Comm Syn Signal Fail	Communicate Synchronization Signal Fail
Warning! Comm. TRIG0 Fail	Communicate Trigger signal fault
Warning! Redundancy Set Fail	As stated.
Warning! Parallel Sys Config. Wrong	Parallel System Configure error
Warning! Maintenance Bypass	Enter maintenance
Warning! Battery Age Alert	Battery Life expiration
Warning! Parallel Rack Cable Loosen	As stated.
Warning! Parallel Rack Config. Wrong	Parallel Rack Configure error
Warning! Parallel Firmware Error	Power module parallel firmware error
Warning! Battery Voltage Low	Battery voltage is too low.
Warning! ID Conflict	Power module ID conflict.
Pre-Alarm! Line Voltage Fail	Line voltage over range
Pre-Alarm! Line Voltage Normal	Line voltage recovered to normal
Pre-Alarm! Line Frequency Unstable	Line frequency over range
Pre-Alarm! Line Frequency Normal	Line frequency recovered to normal
Pre-Alarm! Over Load	Output Load over range
Pre-Alarm! Load Normal	Output Load recovered to normal
Pre-Alarm! Load Unbalance	Output Load unbalance

History Record

Important setting changed

Item No.	Description	Item No.	Description
1	Setup! Model Name	2	Setup! Turn On Password
3	Setup! Language	4	Setup! Change Turn On Password
5	Setup! Adjust Time	6	Setup! Nominal Power Display
7	Setup! System Installed Date	8	Setup! Output Voltage
9	Setup! System Last Maintain Date	10	Setup! Bypass Voltage Range
11	Setup! Battery Installed Date	12	Setup! Bypass Frequency Range
13	Setup! Battery Last Maintain Date	14	Setup! Converter Mode
15	Setup! Change Password	16	Setup! ECO Mode
17	Setup! Baud Rate	18	Setup! Bypass Mode
19	Setup! Audible Alarm	20	Setup! Auto-Restart
21	Setup! Factory Reset	22	Setup! Cold Start
23	Setup! EEPROM Reset	24	Setup! Battery Mode Delay Time
25	Setup! EPO Function	26	Setup! Shutdown Restore Time
27	Setup! Save Setting	28	Setup! Redundancy
29	Setup! Power Rating Setting	30	Setup! Charger Test
31	Setup! Nominal Battery Voltage	32	Setup! Battery Capacity in Ah
33	Setup! Maximum Charging Current	34	Setup! Battery Low Voltage
35	Setup! Battery Low Capacity	36	Setup! Battery Shutdown Voltage

37	Setup! Periodic Battery Test	38	Setup! Stop By Time
39	Setup! BATTERY Age Alert	40	Setup! Temperature Compensation
41	Setup! Charging Voltage	42	Setup! PRE-ALARM
43	Setup! UPS Parallel	44	Setup! Independent Battery

UPS mode change

Item No.	Description	Item No.	Description
1	UPS Mode! Power On Mode	2	UPS Mode! Standby Mode
3	UPS Mode! Bypass Mode	4	UPS Mode! Line Mode
5	UPS Mode! Battery Mode	6	UPS Mode! Battery Test Mode
7	UPS Mode! Fault Mode	8	UPS Mode! Converter Mode
9	UPS Mode! ECO Mode	10	UPS Mode! Shutdown Mode
11	UPS Mode! Un-Connection	12	

Control execution

Item No.	Description	Item No.	Description
1	Control! System Turn On	2	Control! System Turn Off
3	Control! Manual Battery Test	4	Control! Cancel Battery Test
5	Control! Turn To Bypass	6	Control! Shutdown Restore
7	Control! Cancel Shutdown	8	Control! Charger Turn On
9	Control! Charger Turn Off	10	

Interface and Communication

There are dry contact Port (X1~X2), communication port (RS232/USB), SNMP Card slot and Extra Comm. card slot at the front panel.

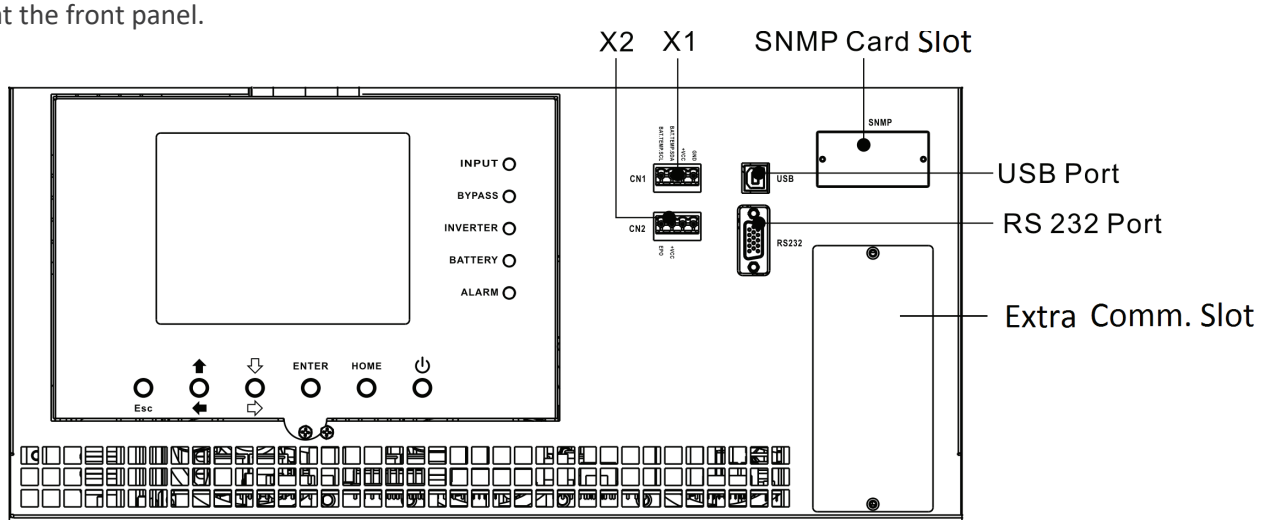

Dry contact ports and communication ports

Dry Contact No.	Function
X1	Battery Cabinet Temperature Detection Port– reserved function
X2	Remote EPO input port

X1-Battery Cabinet Temperature Detection Port

The UPS has battery cabinet temperature detection function. UPS can receive battery cabinet temperature through the external battery cabinet temperature detection board. Communication between the UPS and Battery temperature detection board was via I2C communication protocol. X1 is the battery cabinet temperature detection port.

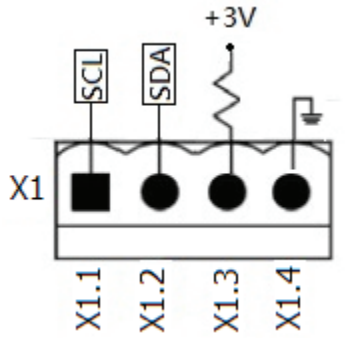

Battery Cabinet Temperature Detection Port

Description of Battery Cabinet Temperature Detection Port

Name	Position	Description
SCL	X1.1	I^2C communication SCL Signal
SDA	X1.2	I^2C communication SDA Signal
+3.0V	X1.3	3V
Power GND	X1.4	GND

X2-Remote EPO Input Port

The UPS has an Emergency Power off (EPO) Function that can be operated by a remote contact assigned by the user. Users can set the logic (N.C or N.O) of this EPO Function through LCD panel. X2 is the remote EPO input port.

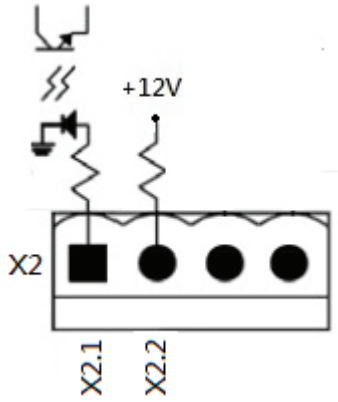

Remote EPO input port

Description of remote EPO port

EPO Logic Setting	Position	Description
N.C	X2.1 & X2.2	EPO activated when Opened X2.1 & X2.2
N.O	X2.1 & X2.2	EPO activated when Shorted X2.1 & X2.2

If EPO Logic setting is Normally Closed (N.C), EPO is triggered when pins 1 and 2 of X1 are opened. Otherwise, EPO Logic setting is Normally Opened (N.O). EPO is triggered when pins 1 and 2 of X2 are closed.

Note:
1. EPO action shuts down the rectifiers, inverters and static transfer switch. But it does not internally disconnect the input power supply.
2. The default setting of the EPO function logic is Normally Opened (N.O).

Other Communication Interface

Extra Comm. Slot
There is an optional card, Extra Comm. Card which can be inserted into this slot. This option can enhance the communication capability of the modular UPS. It provides an additional SNMP Slot, Dry contact I/P & O/P signals and temperature sensors ports.

Local Communication Ports – RS232 & USB
Note: The RS232 and USB ports can't work simultaneously.

SNMP Slot
The SNMP card or AS400 card can be inserted into this slot to work with the UPS.

Troubleshooting

Most of the Fault and Warning need to be released by authorized service personnel. Few of them can be solved by users themselves.

LCD Message	Explanation	Solution
Fault! Bus Over Voltage	DC bus voltage is too high	Contact service personnel.
Fault! Bus Under Voltage	DC bus voltage is too low	Contact service personnel.
Fault! Bus Voltage Unbalance	DC bus voltage is not balanced	Contact service personnel.
Fault! Bus Short	DC bus is short	Contact service personnel.
Fault! Bus Soft Start Time Out	The rectifiers could not start due to low DC bus voltage within specified duration	Turn off UPS and then restart the UPS. If it fails again, contact service personnel.
Fault! Inverter Soft Start Time Out	Inverter voltage cannot reach desired voltage within specified duration	Turn off UPS and then restart the UPS. If it fails again, contact service personnel.
Fault! Inverter Voltage Over	Inverter Voltage over (Peak Value)	Contact service personnel.
Fault! Inverter Voltage High	Inverter Voltage is too high	Contact service personnel.
Fault! Inverter Voltage Low	Inverter Voltage is too Low	Contact service personnel.
Fault! R Inverter Voltage Short	R phase inverter Output is shorted	Contact service personnel.
Fault! S Inverter Voltage Short	S phase inverter Output is shorted	Contact service personnel.
Fault! T Inverter Voltage Short	T phase inverter Output is shorted	Contact service personnel.
Fault! RS Inverter Voltage Short	R-S inverter Output is shorted	Contact service personnel.

Fault! ST Inverter Voltage Short	S-T inverter Output is shorted	Contact service personnel.
Fault! TR Inverter Voltage Short	T-R inverter Output is shorted	Contact service personnel.
Fault! Inverter R Negative Power	R phase inverter Output Negative Power over range	Contact service personnel.
Fault! Inverter S Negative Power	S phase inverter Output Negative Power over range	Contact service personnel.
Fault! Inverter T Negative Power	T phase inverter Output Negative Power over range	Contact service personnel.
Fault! Over Load Fault	Heavy overload causes UPS fault.	Reduce some load.
Fault! Battery Fault	Battery reverse	Check the polarity of battery connection and contact service personnel.
Fault! Over Temperature	Make sure adequate space is allowed for air vents and the fan is working	Check if the ambient temperature is over specification. Or contact service personnel.
Fault! CAN Fault	CAN communication fault	Contact service personnel.
Fault! TRIG0 Fault	Synchronized trigger signal fault	Contact service personnel.
Fault! Relay Fault	Inverter relay fault	Contact service personnel.
Fault! Line SCR Fail	Line SCR short circuit fault	Contact service personnel.
Fault! EEPROM Fault	EEPROM operation error	Contact service personnel.
Fault! Parallel Cable Loosen Fault	As stated.	Check if the parallel cable is loose and contact service personnel.
Fault! DSP MCU Stop Communicate	As stated.	Contact service personnel.
Fault! Bypass Temperature Fault	As stated	Check if the ambient temperature is over specification. Or contact service personnel.
Fault! Bypass SCR Fault	As stated.	Contact service personnel.
Warning! EPO Active	Check the EPO connector	Check if the connector is loose when EPO acts abnormally.
Warning! Over Load Fail	The load devices are demanding more power than the UPS can supply. Line mode will transfer to Bypass mode.	Reduce some load and check output Load-Capacity and specification
Warning! Communicate CAN Fail	CAN communication error	Contact service personnel.
Warning! Over Load	In Line mode, the load devices are demanding more power than the UPS can supply.	Reduce some load and check output Load-Capacity and specification

Warning! Battery Open	Battery not connected	1. Check battery breaker. 2. Check if the battery connection is well connected. 3. Check the setting of Nominal Battery voltage. 4. Contact service personnel if necessary
Warning! Battery voltage High	Battery voltage is too High	Check the setting of Nominal Battery voltage and contact service personnel.
Warning! Module Un-Lock	As stated.	Check if module is locked well.
Warning! Turn On Abnormal	As stated.	Check if the input voltage or frequency is out of range.
Warning! Charge Fail	As stated.	Contact service personnel.
Warning! EEPROM Fail	EEPROM operation error	Contact service personnel.
Warning! Fan Lock	As stated.	Check if the fan is blocked or contact service personnel.
Warning! Line Phase Error	As stated.	Check if the Mains phase sequence is correct and contact service personnel.
Warning! Bypass Phase Error	As stated.	Check if the Bypass phase sequence is correct and contact service personnel.
Warning! N Loss	Neutral loss	Check if the Neutral connection is well and contact service personnel..
Warning! Internal Initial Fail	As stated.	Contact service personnel.
Warning! Comm. Syn. Signal Fail	Communicate Synchronization Signal Fail	Contact service personnel.
Warning! Comm. TRIG0 Fail	Communicate Trigger signal fault	Contact service personnel.
Warning! Redundancy Set Fail	As stated.	Check the redundancy setting is correct and contact service personnel.
Warning! Parallel Sys Config. Wrong	Parallel System Configure error	Contact service personnel.
Warning! Maintenance Bypass	Enter maintenance	Check if the connector is loose when it acts abnormally.
Warning! Battery Age Alert	Battery Life expiration	Check if the battery has been used over its service age. Or contact service personnel.
Warning! Parallel Rack Cable Loosen	As stated.	Check if the Parallel Rack Cable is loose and contact service personnel.
Warning! Parallel Rack Config. Wrong	Parallel Rack Configure error	Check the Parallel Rack Setting is correct and contact service personnel.
Warning! Parallel Firmware Error	Power module parallel firmware error	The firmware version does not support Rack Parallel feature. Contact service personnel.
Warning! ID Conflict	Power module ID conflict.	There are two Power Modules with the same ID numbers. Change the repeated ID to release it. Or contact service personnel.

Service

This chapter introduces how to replace the power module.

Warning:
Only the customer service engineers can do this service.
Remove the power modules from top to bottom, so as to prevent cabinet from toppling due to high center of gravity.

Replacement Procedures Of Power Module

Warning:

- Confirm UPS is in Line mode or Bypass mode.
- Confirm at least one Power Module remains in the UPS cabinet after one Power Module is removed
- If all power modules have to be removed, the replacement MUST be under Maintenance Bypass Operation Mode.

1. Turn ready switch to "🔓" position
2. The Power Module FAULT LED (RED) indicator is lit to indicate the Power Module output is off and disconnected from UPS system.
3. Use a screwdriver to remove the four screws from fixing holes.
4. Two people pull out together and remove the Power Module from its slot together.
5. After servicing the module, confirm that the DIP switch of the module is set correctly and the ready switch is in unready state "🔓".
6. Push the module into the cabinet and tighten the screws on both sides. If there are more than one power modules to re-install, please wait 30-second before installing another module.
7. The re-installed Power Module will be turned on automatically when UPS is in line mode.

Specifications

The chapter states the specifications of UPS.

Conformity and Standards

The UPS has been designed to conform to the European and international standards listed below.

European and international standards

Item	Normative reference
Uninterruptible power systems (UPS) – Part 1: General and safety requirements for UPS	UL1778, CSA C22.2 No.107.3-14
Notes:	
ESD	IEC/EN 61000-4-2 Level 3
RS	IEC/EN 61000-4-3 Level 3
EFT	IEC/EN 61000-4-4 Level 3
Surge	IEC/EN 61000-4-5 Level 3
CS	IEC/EN 61000-4-6 Level 3
Power-Frequency Magnetic field	IEC/EN 61000-4-8 Level 3
Low Frequency Signals	IEC/EN 61000-2-2

Conduction	FCC Part 15,Subpart B Class A
Radiation	FCC Part 15,Subpart B Class A

Environmental Characteristics

Item	Unit	Specifications
Noise within 1 m	dB	Max. 68.2
Altitude	m	≤1000, derate power by 1% per 100m between 1000m and 2000m
Relative humidity	% RH	0 ~ 95, non-condensing
Operating temperature	°C	0 ~ 40°C (Output capacity will be derated when temperature is over 30°C. It will be derated to 90% at 35°C and 80% at 40°C.
Storage and transportation temperature for UPS	°C	-15 ~ 60

Mechanical Characteristics

Model		E-60LV
Rated power (kVA)	Unit	60
Dimensions, W x D x H	mm	515 x 1000 x 760
Weight	kg	182
Color	N/A	Black
Protection degree, IEC (60529)	N/A	IP20

Electrical Characteristics (Input Rectifier)

Rectifier AC input (mains)

Rated power (kVA)	Unit	20~60
Rated AC input voltage	Vac	208/220 (3-phase and sharing neutral with the bypass input)
Input voltage tolerance	Vac	156 ~ 253; 121~ 253 (output derated below 70%)
Frequency	Hz	50/60 (tolerance: 40Hz ~ 70Hz)
Power factor	kW/kVA,	
full load (half load)	0.99 (0.98)	
Harmonic current distortion	THDI% FL	<3

Electrical Characteristics (Intermediate DC Circuit)

Battery

Intermediate DC circuit		
Model		**E-60LV**
Rated power (kVA)	Unit	20 ~ 60
Number of lead-acid cells	Nominal	120 (6cells x 20 12V battery block)
Float voltage	V/cell	2.3V/cell Constant current and constant voltage charge mode
Temperature compensation	mV/°C/cl	0~-5 (Option)

Ripple voltage	% V float	≤1
Ripple current	% C10	≤5
Boost voltage	VRLA	2.35V/cell Constant current and constant voltage charge mode
EOD voltage	V/cell	1.67V/cell
Battery charge	V/cell	Limit current and constant voltage charge mode Floating Voltage 2.3V/cell Boost charging 2.35V/cell
Battery charging power[1] max current	A	8 / per power module (adjustable)
Note: At low input voltage the UPS recharge capability increases with load decrease (up to the maximum capacity indicated).		

Electrical Characteristics (Inverter Output)

Rated power (kVA)	**Unit**	**20 ~ 60**
Rated AC voltage1	Vac	208/220 (three-phase four-wire, with neutral reference to the bypass neutral)
Frequency	Hz	50/60 Auto Selectable
Overload	%	105%~110% for 60min; 110%~125% for 10min; 126%~150% for 1min; >150% for 200ms
Neutral current capability	%	170%
Steady state voltage stability	%	±1 (balanced load), ±2 (100% unbalanced load)
Total harmonic voltage	%	<2 (linear load), <4 (non-linear load)
Synchronization window		+/- 1Hz, +/- 2Hz, +/- 4Hz (default: 4Hz)
Note: Factory setting is 208V. 220V is selected by commissioning engineer.		

Electrical Characteristics (Bypass Mains Input)

Rated power (kVA)	**Unit**	**20 ~ 60**
Rated AC voltage[1]	Vac	208/220 (Three-phase four-wire, sharing neutral with the rectifier input and providing neutral reference to the output)
Rated current	A	60KVA -> 167
Overload	%	105%~110% for 60min; 110%~125% for 10min; 126%~150% for 1min; >150% for 200ms
Upstream protection, bypass line	N/A	Circuit breaker, rated up to 100% of nominal output current.
Current rating of neutral cable	A	1.7 × In
Frequency	Hz	50/60 Auto Selectable
Transfer time (between bypass and inverter)	ms	Synchronous transfer: ≤20ms
Bypass voltage tolerance	%Va c	Upper limit: +10, +15 or +20, default: +15 Lower limit: -10, -20, default: -20 (delay time to accept steady bypass voltage: 10s)
Frequency Range	Hz	+/- 1Hz, +/- 2Hz, +/- 4Hz (default: 4Hz)
Note: Factory setting is 208V. 220V is selected by commissioning engineer.		

Specifications

MODEL NUMBER		M90-20	M90-40	M90-60
CAPACITY	Power rating	20kVA/18kW	40kVA/36kW	60kVA/54kW
	Enclosure capacity: power modules	Up to 60kVA (3 x 20kVA)		
	Enclosure capacity: battery modules	4, 8, or 12 internal battery modules		
INPUT	Voltage / frequency nominal	208/120V, 50/60Hz auto sensing		
	Voltage / frequency range	121–253VAC* (L-L), 40–70Hz		
OUTPUT	Voltage	208/120V		
	Frequency	50/60Hz ± 0.5Hz		
	THD (full load)	< 2%		
	Efficiency	Up to 98% ECO mode, 94% online mode		
	Overload capacity	105%-110% for 60min; 110%-125% for 10min; 126%-150% for 1min; >150% for 200ms		
BATTERY SYSTEM	Nominal voltage	± 120V		
	Temperature compensation	Yes with optional sensor		
	Maximum charging current	8A (adjustable)	16A (adjustable)	24A (adjustable)
DIMENSIONS & WEIGHT	Enclosure	20.3"W x 39.4"D x 54"H / 484 lbs		
	Power module	19.0"W x 28.0"D x 5.1"H / 74 lbs		
	Battery module	4.1"W x 28.3"D x 6.0"H / 68 lbs		
ENVIRONMENT	Temperature	0–40°C (32–104°F)**		
	Altitude	5,200 ft above sea level**		
	Audible noise	< 65dBA at 1m		
APPROVALS		UL-1778 (TUV), cUL, FCC A, RoHS, Energy Star Certified		
WARRANTY		2 years (USA and Canada)		
COMMUNICATIONS INTERFACE		RS-232, EPO, intelligent slot for optional cards (Web/SNMP, Relay, Modbus)		
INCLUDED IN BOX		User manual, RS-232 cable, Ramp for unloading UPS enclosure		
AVAILABLE OPTIONS		External maintenance bypass, 480V input transformer, output distribution, battery temperature sensor		

MODEL NUMBER		M90L-20	M90L-40	M90L-60
CAPACITY	Power Rating	20kVA/18kW	40kVA/36kW	60kVA/54kW
	Enclosure capacity: power modules	Up to 60kVA (3 x 20kVA)		
INPUT	Voltage/frequency nominal	208/120V, 50/60Hz auto-sensing		
	Voltage/frequency range	121VAC to 253VAC*		
OUTPUT	Voltage	208/120V		
	Frequency	50/60Hz ± 0.5Hz		
	THD (full load)	< 2%		
	Efficiency	Up to 98% ECO mode, 94% online mode		
	Overload capacity	105%-110% for 60min; 110%-125% for 10min; 126%-150% for 1min; >150% for 200ms		
DIMENSIONS & WEIGHT	Enclosure	20.3"W x 39.4"D x 30"H / 227 lbs		
	Power module	19.0"W x 28.0"D x 5.1"H / 74 lbs		
ENVIRONMENT	Temperature	0–40°C (32–104°F)**		
	Altitude	5,200 ft above sea level**		
	Audible Noise	< 65dBA at 1m		
APPROVALS		UL-1778 (TUV), cUL, FCC A, RoHS		
WARRANTY (UPS)		2 years (USA and Canada)		
COMMUNICATIONS INTERFACE		RS-232, EPO, intelligent slot for optional cards (Web/SNMP, Relay, Modbus)		
INCLUDED IN BOX		User manual, RS-232 cable, Ramp for unloading UPS enclosure		
AVAILABLE OPTIONS		External maintenance bypass, 480V input transformer, output distribution, external battery pack battery, battery temperature sensor		

**Depending on load level **Battery life is reduced above 30°C, UPS capacity derates above 30°C and 5,200 ft above sea level*

Obtaining Service

If the UPS requires Service:

1. Use the TROUBLESHOOTING section in this manual to eliminate obvious causes.
2. Verify there are no circuit breakers tripped.
3. Call your dealer for assistance. If you cannot reach your dealer, or if they cannot resolve the problem, call Xtreme Power Conversion Corp Technical Support at 800.582.4524. Technical support inquiries can also be made at support@xpcc.com. Please have the following information available BEFORE calling the Technical Support Department:
   - Your name and address.
   - The serial number of the unit.
   - Where and when the unit was purchased.
   - All of the model information about your UPS.
   - Any information on the failure, including LED's that may or may not be illuminated.
   - A description of the protected equipment, including model numbers if possible.
   - A technician will ask you for the above information and, if possible, help solve your problem over the phone. In the event that the unit requires factory service, the technician will issue you a Return Material Authorization number (RMA).

If you are returning the UPS to Xtreme Power for service, please follow these procedures:

1. Pack the UPS in its original packaging. If the original packaging is no longer available, ask the Technical Support Technician about obtaining a replacement set of packaging material. It is important to pack the UPS properly in order to avoid damage in transit. Never use Styrofoam beads for a packing material.
2. Include a letter with your name, address, daytime phone number, RMA number, a copy of your original sales receipt, and a brief description of the problem.
3. Mark the RMA number on the outside of all packages. Xtreme Power cannot accept any package without the RMA number marked on the outside of the boxes.
4. Return the UPS by insured, prepaid carrier to the address provided by the Technician.
5. Refer to the Warranty statements in this manual for additional details on what is covered.

Xtreme Power Conversion M90 Limited Warranty

Xtreme Power Conversion (XPC) Corporation warrants Xtreme Power Conversion equipment, when properly applied and operated within specified conditions, against faulty materials or workmanship for a period of two years for M90-Series products from the date of purchase. XPC Corporation warrants internal batteries for a period of two years from the date of purchase. For equipment sites within the United States and Canada, this warranty covers repair or replacement, at the sole discretion of XPC Corporation. The customer is responsible for the costs of shipping the defective product to XPC Corporation. XPC Corporation will pay for ground shipment of the repaired or replacement product. The limited warranty does not cover on-site labor. This warranty applies only to the original purchaser. Warranty void if equipment is commissioned by non-factory trained personnel.

If equipment provided by XPC Corporation is found to be Dead-on-Arrival (DOA), the customer must request and received a Return Material Authorization (RMA) number. DOA equipment is defined as equipment that does not properly function according to user documentation when initially received and connected in conjunction with proper procedures as shown in the user documentation or via support provided by XPC Corporation personnel or authorized agents.

This warranty shall be void if (a) the equipment is repaired or modified by anyone other than XPC Corporation or a XPC Corporation approved third party; (b) the equipment is damaged by the customer, is improperly used or stored, is subjected to an adverse operating environment, or is operated outside the limits of its electrical specifications; or (c) the equipment has been used or stored in a manner contrary to the equipment's operating manual, intended use or other written instructions; or (d) the equipment is damaged due to improper installation or startup. Any technical advice furnished by XPC Corporation or a XPC Corporation authorized representative before or after delivery with regard to the use or application of Xtreme Power Conversion equipment is furnished on the basis that it represents XPC Corporations best judgment under the situation and circumstances, but it is used at the recipient's sole risk.

EXCEPT AS STATED ABOVE, XPC Corporation DISCLAIMS ALL WARRANTIES, EXPRESSED OR IMPLIED, INCLUDING WARRANTIES OF MERCHANTABILITY AND FITNESS FOR A PARTICULAR PURPOSE.

EXCEPT AS STATED ABOVE, IN NO EVENT WILL XPC Corporation BE LIABLE FOR DIRECT, INDIRECT, SPECIAL, INCIDENTAL, OR CONSEQUENTIAL DAMAGES ARISING OUT OF THE USE OF Xtreme Power Conversion EQUIPMENT, including but not limited to, any costs, lost profits or revenue, loss of equipment, loss of use of equipment, loss of software, loss of data, cost of substitutes, or claims by third parties. Purchaser's sole and exclusive remedy for breach of any warranty, expressed or implied, concerning Xtreme Power Conversion equipment, and the only obligation of XPC Corporation under this warranty, shall be the repair or replacement of defective equipment, components, or parts; or, at XPC Corporations sole discretion, refund of the purchase price or substitution of an equivalent replacement product.

Appendix A: Battery Cabinet Installation

Assembly

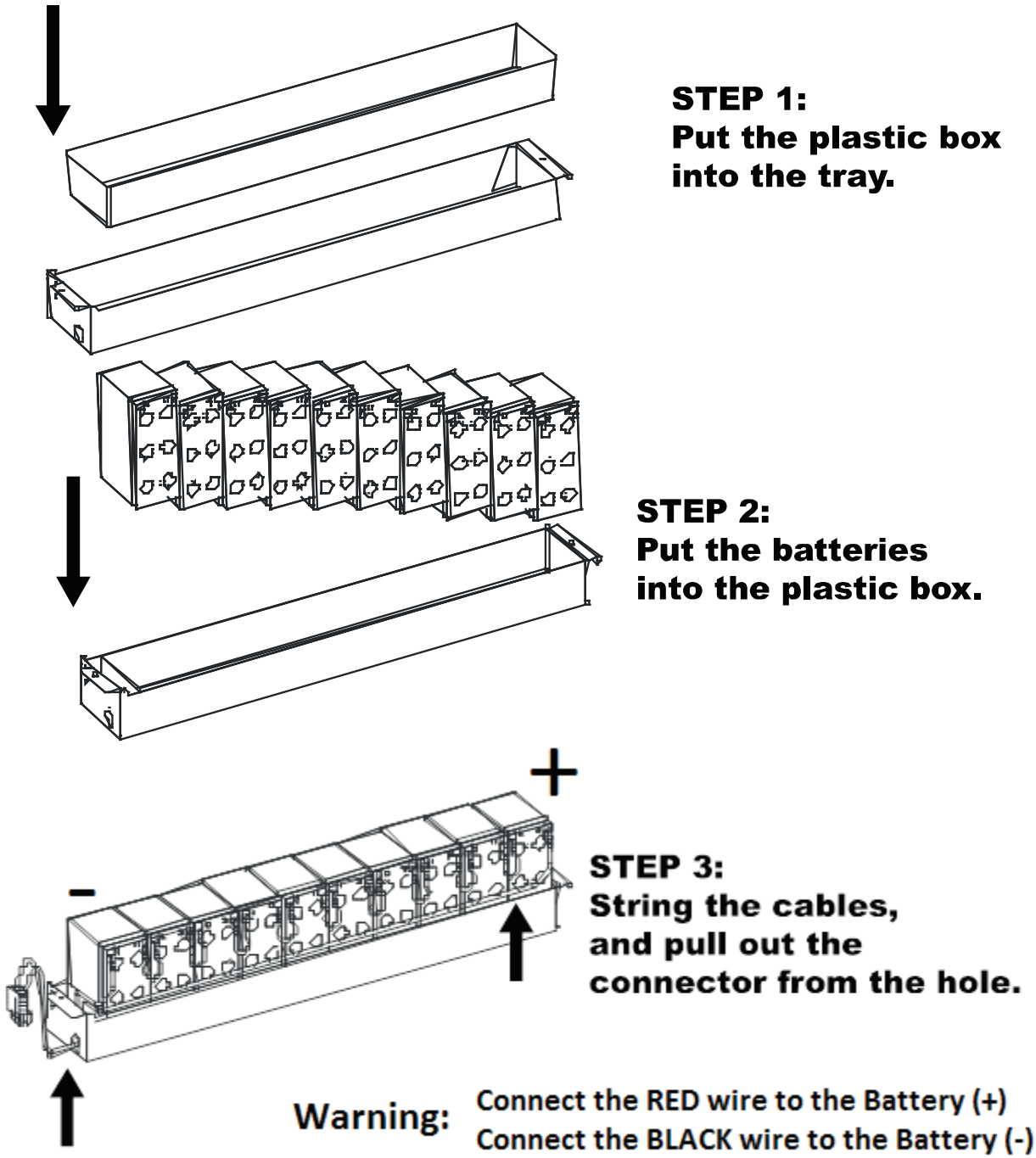

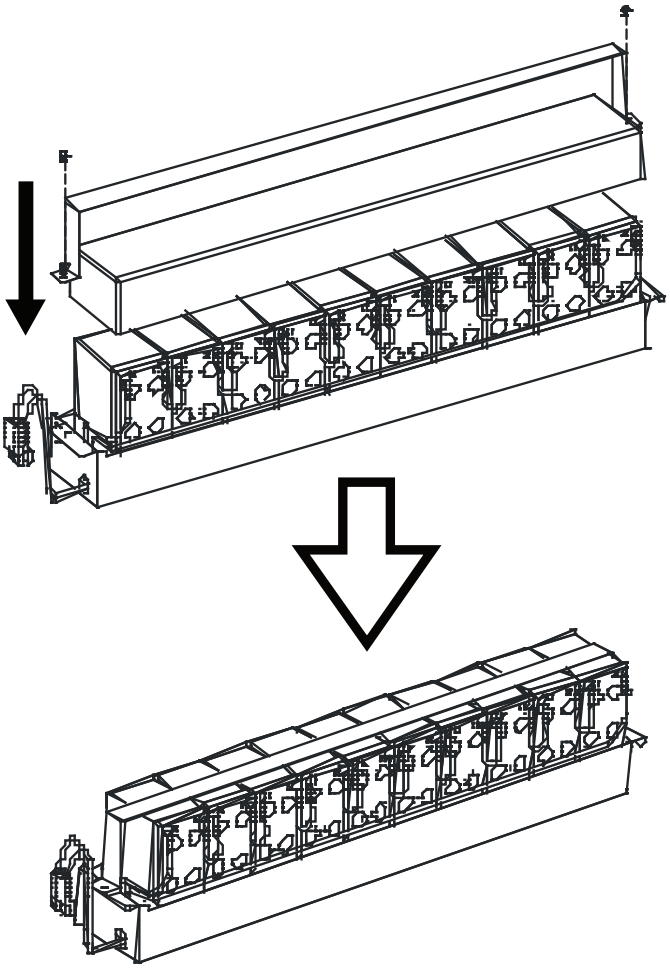

STEP 4:
Put the lid on the box and use holding bar to fix lid with the box and tighten the screws.

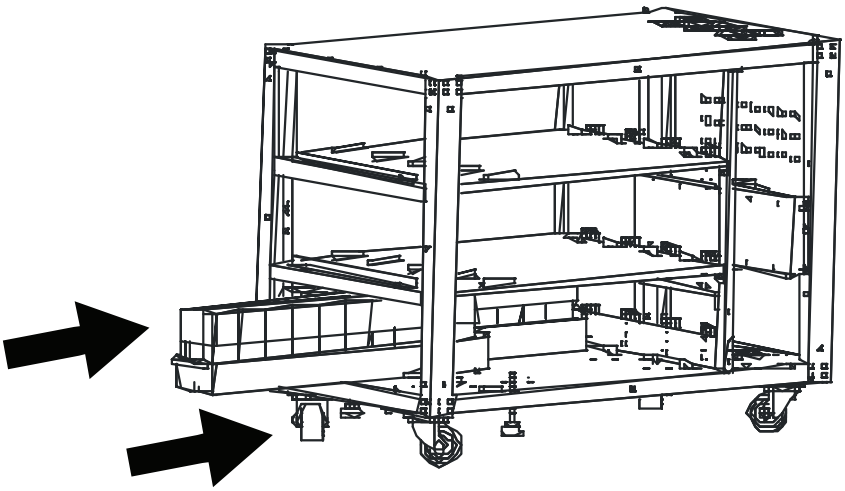

STEP 5:
Put the battery set into the rack.

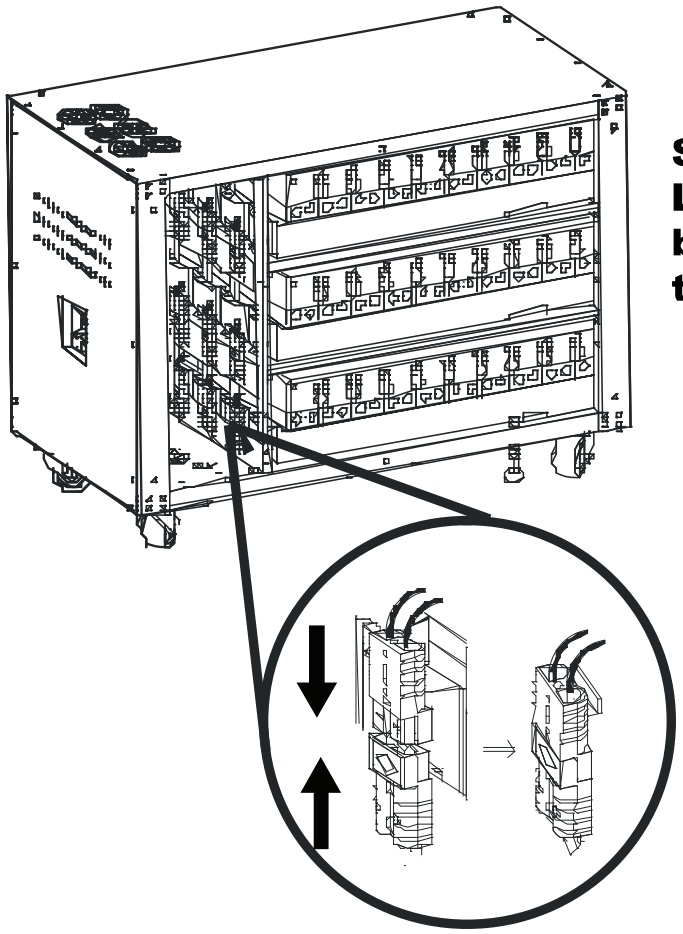

STEP 6:
Link the upper external battery connecter with the lower one.

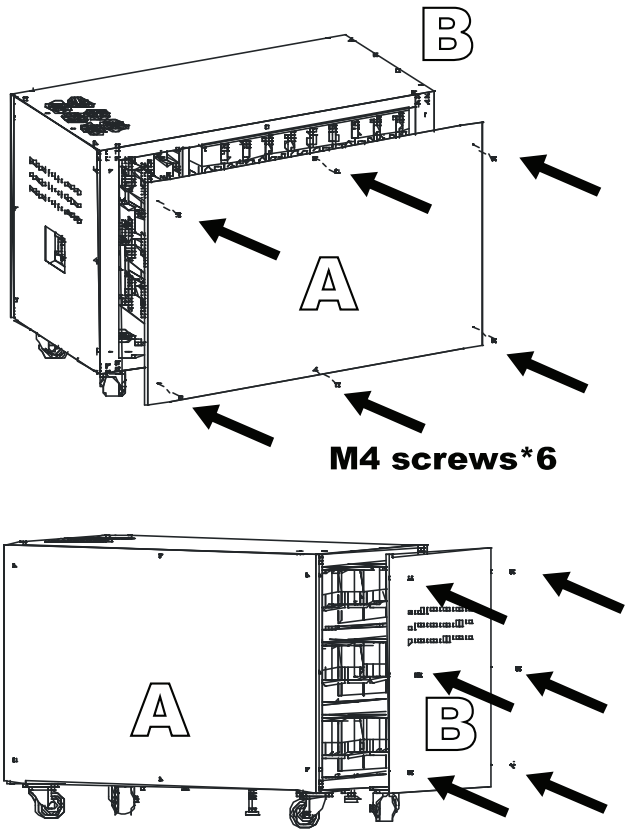

STEP 7:
Fix lid A with six M4 screws, and lid B with six M4 screws.

Internal Battery Wiring

DC±120V

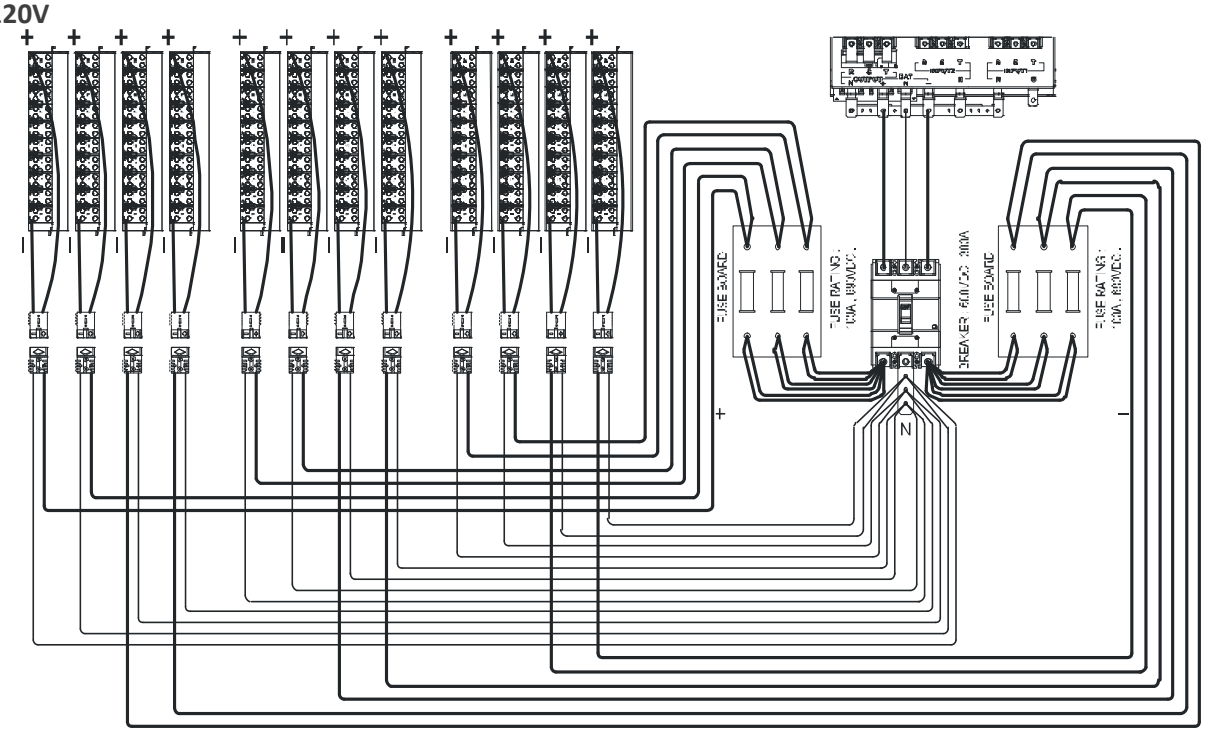

External Battery Wiring

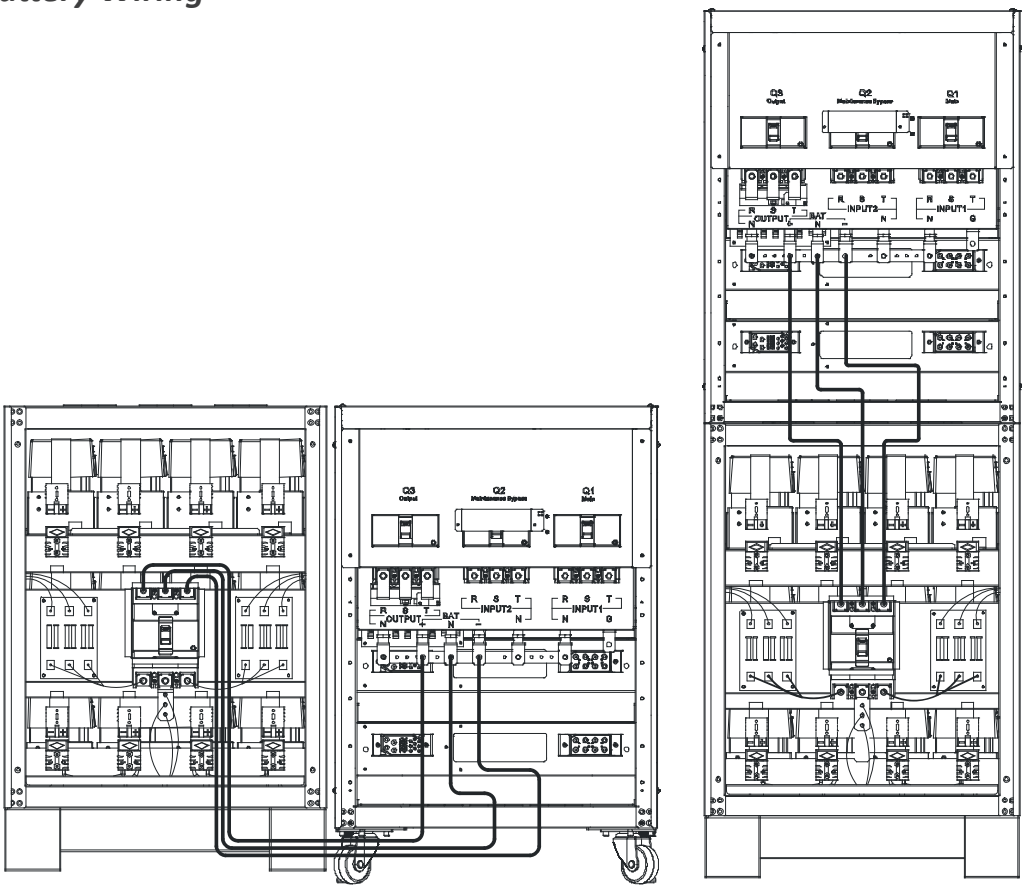

Horizental **Vertical**

Note: Ensure the UPS is properly grounded.

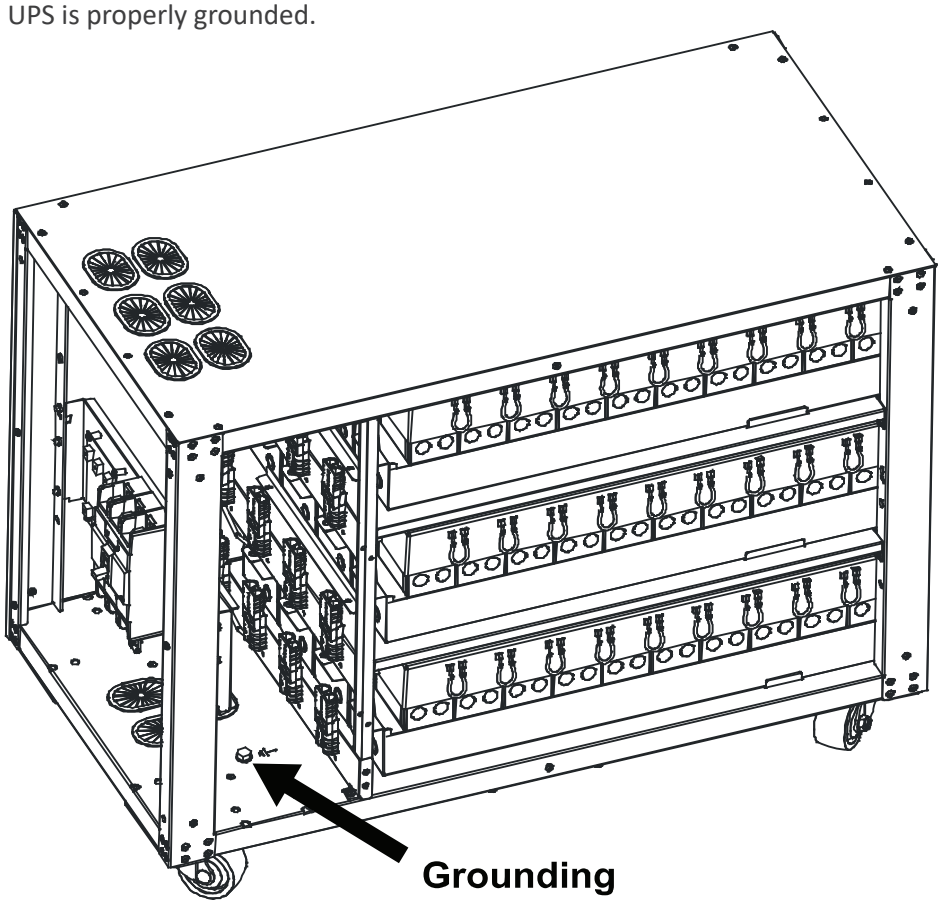

Battery Replacement

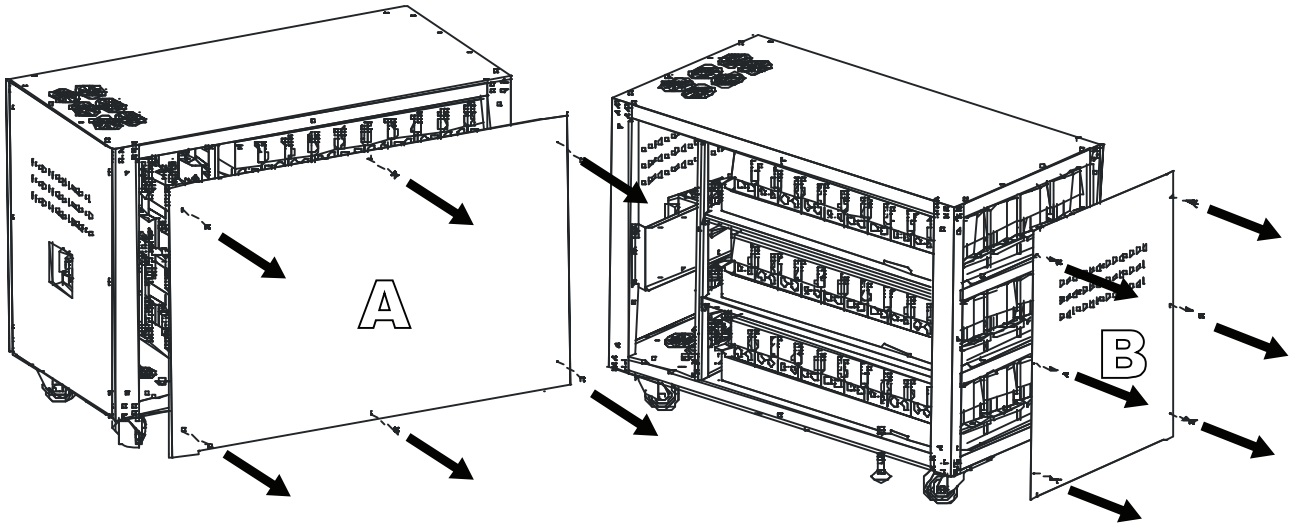

STEP 1:
Loosen the screws
and remove the lids- A&B

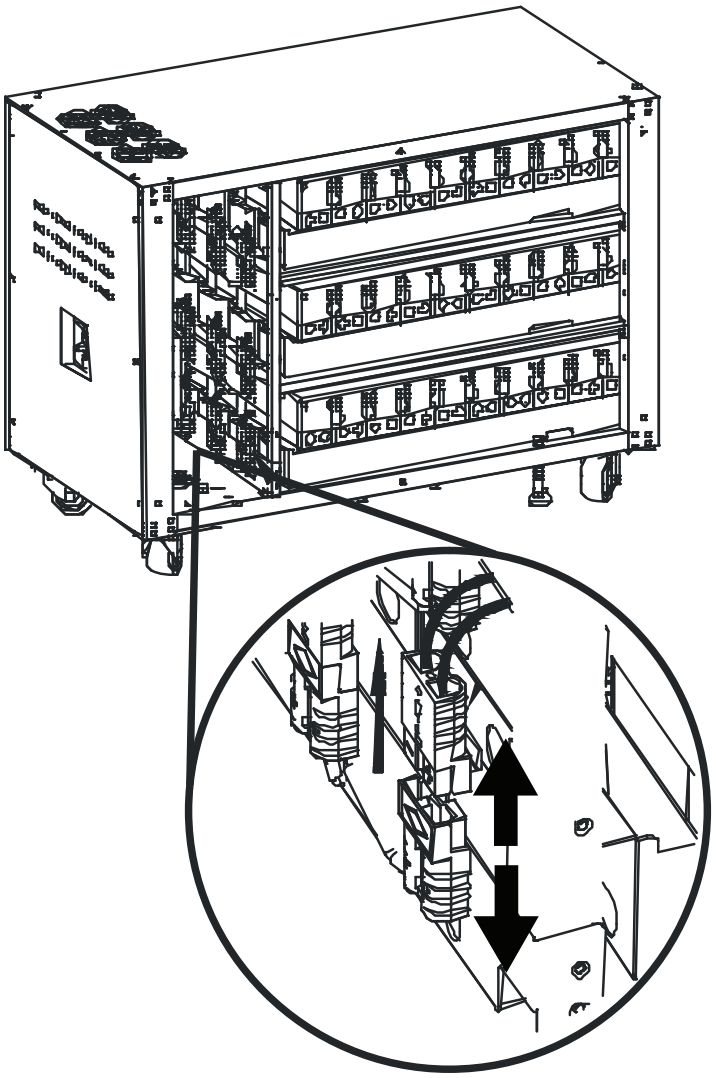

STEP 2:
Disconnect the upper external connecter with the lower one.

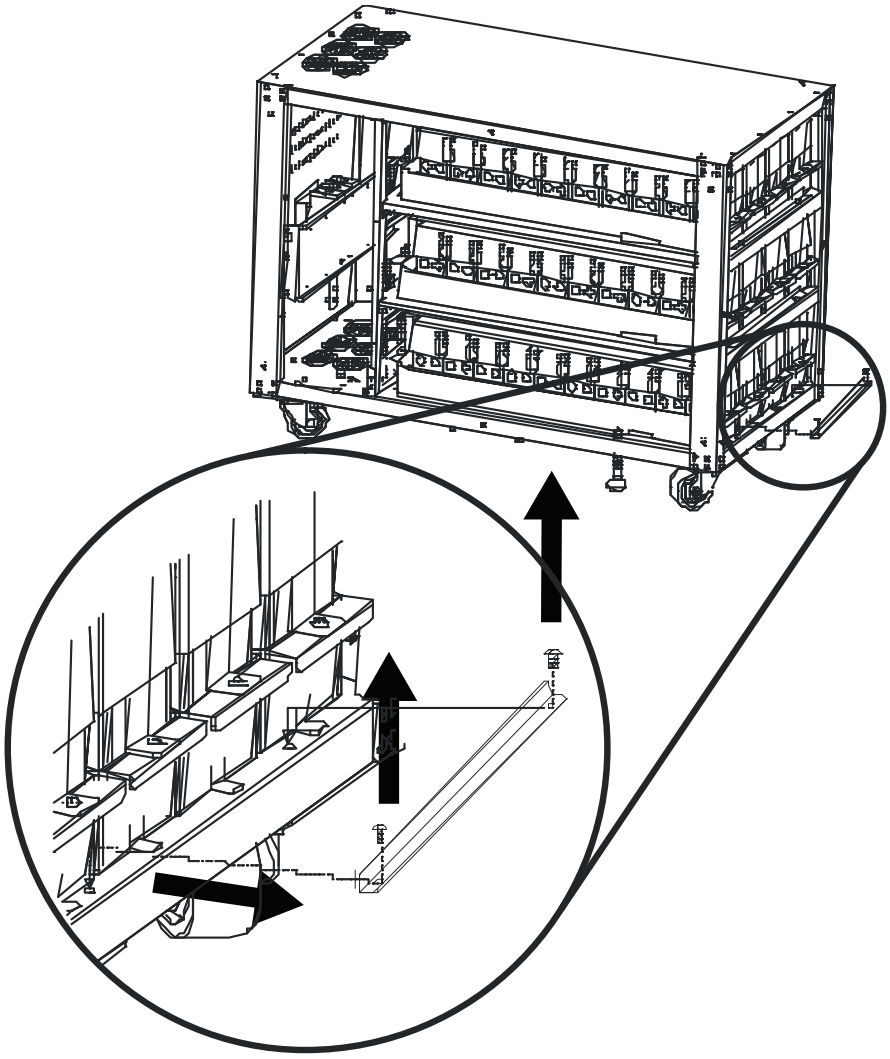

STEP 3:
Loosen the screws and remove frame.

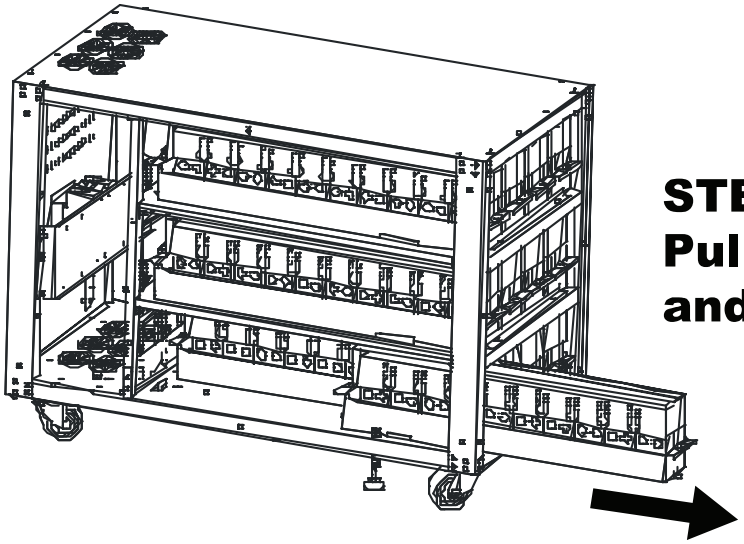

STEP 4:
Pull out the battery set, and replace the batteries.